1. PC January 01 Agenda

Documents:

01-JAN 2019 AGENDA.PDF

1.I. PC January 02 Draft Dec 2018 Minutes

Documents:

02- 12-19-18 DRAFT PLANNING MEETING MINUTES.PDF

1.II. PC January 03 Capital Review - 2019 PM Project

Documents:

01.1- COVERSHEETCOMPLETE STREETS REVIEW.PDF
01.2 - OVERVIEW MAP.PDF
02.1 - HURON CS- MEMO.PDF
02.2- CS WORKSHEET CHECKLIST-HURON.PDF
02.3- HURON DWGS.PDF
03.1 - CONGRESS CS- MEMO.PDF
03.2- CS WORKSHEET CHECKLIST CONGRESS.PDF
03.3- CONGRESS DWGS.PDF
04.1 - HARRIET CS- MEMO.PDF
04.2- CS WORKSHEET CHECKLIST-HARRIET.PDF
04.3- HARRIET DWGS.PDF
05- STANDARD DETAILS.PDF
06- THERIDE.PDF

1.III. PC January 04 Medical Marijuana Provisioning Centers Buffer

Documents:

04- MMJ BUFFER INCREASE BETWEEN PROVISIONING.PDF

1.IV. PC January 05 Firearms Text Amendments

Documents:

01- FIREARMS- AMENDTEXT.PDF
02- FIREARM REGULATION 030818.PDF
03- FIREARM-SHOOTING RANGE CITY REGULATIONS 011019.PDF

1.V. PC January 06 Misc Text Amendments

Documents:

06- MISC TEXT AMENDMENTS.PDF

1.VI. PC January 07 - 307 N River

Documents:

07- 307 N RIVER - CULTIVATE.PDF

1.VI.i. PC January 08 Nonmotorized Member Appointments

Documents:

RESOLUTION FOR COMMITTEE MEMBER APPOINTMENT TO NMAC.PDF

1.VI.ii. PC January 09 Nonmotorized Committee Officers

Documents:

09- RESOLUTION FOR COMMITTEE CHAIR RECOMMENDATION.PDF

1.VII. PC January 10 Plan Proposals

Documents:

10- COMBO PLAN- MEMO.PDF

1.VIII. PC January 11 Nonmotorized Committee Report

Documents:

2018 NMAC ANNUAL REPORT FINAL.PDF
NMAC MEETING MINUTES - JANUARY 2019.PDF

2. PC January FULL PACKET

Documents:

00- JAN PC PACKET FULL.PDF

Agenda
Planning Commission
Wednesday, 16 January 2019 – 7:00 P.M.
City Hall – Council Chambers, 1 S Huron St
Ypsilanti, MI 48197

I. Call to Order

II. Roll Call

Matt Dunwoodie, Chair	P	A
Jared Talaga, Vice-Chair	P	A
Toi Dennis	P	A
Jessica Donnelly	P	A
Phil Hollifield	P	A
Heidi Jugenitz	P	A
Jelani McGadney	P	A
Michael Simmons	P	A

III. Approval of Minutes

- December 19, 2018

IV. Audience Participation

Open for general public comment to Planning Commission on items for which a public hearing is not scheduled. Please limit to five minutes.

V. Presentations and Public Hearing Items

- Capital Improvements Review: 2019 Pavement Maintenance Program
  Presentation
- Medical Marijuana Provisioning Centers: Increase in Buffer
  Public Hearing: Text Amendment
  Tabled from 3/21/2018
- Commercial Sales and Commercial Recreational Use of Firearms
  Public Hearing: Text Amendment
- Miscellaneous text updates including parking, setbacks, nonconforming A, and corrections
  Public Hearing: Text Amendment

VI. Old Business

- 307 N River: Site plan review
  Tabled from 7/18/2018 – to remain on table pending ZBA action

VII. New Business

- Appointment of Members for the Non-Motorized Transportation Committee
- Appointment of Officers for the Non-Motorized Transportation Committee
- Master Plan Update/Sustainability Plan Proposal discussion

VIII. Future Business Discussion / Updates

IX. Committee Reports

- Non-motorized Committee Report (minutes, annual report)
- Master Plan: Housing Affordability and Access subcommittee report

X. Adjournment

PLANNING COMMISSION
MEETING MINUTES
December 19, 2018
CITY COUNCIL CHAMBERS
7:00 P.M.

I. CALL TO ORDER

The meeting was called to order at 7:05 p.m.

II. ROLL CALL

Present: M. Dunwoodie, J. Donnelly, P. Hollifield, J. McGadney
M. Simmons, J. Talaga

Absent: T. Dennis, H. Jugenitz (excused)

Staff: Bonnie Wessler, City Planner
Joe Meyers, EDC Director

III. APPROVAL OF MINUTES

Commissioner P. Hollifield moved to approve the minutes of November 14, 2018 (Support: J. Talaga) and the motion carried unanimously.

IV. AUDIENCE PARTICIPATION

Nathanael Romero, Ward 1 – support kiosks – great for city – social media a powerful tool to get information out there. He is a member of the sub-committee on Housing and feels it would be great if we could publicly advertise on kiosks. Great for free-lancers, musicians, etc.

Brian Geringer, 415 Pearl – supports lifting ban on public flyering until certain amount of kiosks are built. He feels this is a Human Rights issue – lack of ability for musicians to be able to post their information giving access to the public and level the playing field.

Christina Glulia, **lives in Ward 1** – strongly supports public kiosks. Understands the problem with litter on light poles, etc and is a nuisance people not taking them down, but there is nowhere for people to go to know about events. The city has lost all the press and need to be able to inform people about events. She is a member of the Music and Arts Guild and feels we need a place to be able to let the public know of community events, etc. She strongly supports kiosks.

Kyle Hunter, 430 S. Adams – Supports kiosks. He stated that he had put information on light poles and as he was doing it, one of the city officials was right behind him removing them so he agrees that kiosks would be a great addition because of the in ability of places for residents to post their information. He recommends a temporary stay on the ban on putting

stuff on light posts until we come up with an agreement on kiosks giving local artists an opportunity to promote themselves. Also supportive of people being able to post things on vacant buildings.

Amber Fellows, Ward 3 – Vice Chair of the Human Relations Commission, in attendance on their behalf. She passed out two documents which she planned to discuss – the ordinance and the resolution. She stated this all began in 1983 when an ordinance was enacted under the Nuisance Ordinance to ban the posting of notices in public spaces, light posts, etc. Since that time there has not been any public outcry for anything to replace this function. She stated there are two places in the current Code of Ordinances where the language is ineffective and needs to be fixed. She has heard from city staff that there are two locations that are regarded as kiosks; at Riverside by the bridge and the other is on S. Grove. If this is the case, it should be brought to the attention of the public that public noticing is allowed at these two locations.

She detailed the specific ordinances with which she had concerns – adding that the ordinances in question do not function in a way that would be advantageous to the public. She realizes this is not under the jurisdiction of the Planning Commission but she is looking to gain support to go before City Council.

Since there is no newspaper in the city, there is no way to get information to the public. She would like to see everyone treated equally and by having kiosks, there would be a specific location for all people in the city to post their information. She also pointed out that it is possible that it is an ACLU violation to have an ordinance on the books that restricts freedom of speech; if someone posted something and the city enforced the ordinance by taking it down, it might be a violation. She referred to an ordinance in Ann Arbor and it is her opinion that the City of Ypsilanti should mirror that ordinance.

V. PRESENTATION AND PUBLIC HEARING ITEMS

1. 9 Casler – Serious Sober Living

City Planner Wessler stated that this is a request to rezone a parcel on the north-east of Spring/Harriet and Huron intersection, near intersection of Casler and Bell. It has been used in the past as a single family home and is surrounded in the immediate area by single family homes, and in the wider area, some multi-family and just to the northeast as you go to the south, there are a mix of uses. In the Master Plan it does not distinguish between the three levels of zoning for core neighborhoods. The property is currently zoned CN-Mid, as are the other properties fronting on to Casler. The applicant is looking to rezone to CN, Core Neighborhood that would permit an increase in density as well as rooming houses, etc. At this time, staff is recommending denial.

Commissioner Hollifield moved to open the public portion of the hearing (Support: J. McGadney) and the motion carried.

Kirk Winnega, who was accompanied by his wife, owners of the property – stated that it is their belief they do fit into the neighborhood. Although they are non-profit, they are a good example to others. They have been blessed and want to give back – although they are a non-profit, they don't make any money. The people have to be students; there are curfews;

have drug testing, they work with counsellors as well as their families help them write resumes. The kids know they have to follow strict rules. They have no neighbors to the right – most of the kids have no cars so traffic is not a problem. They take kids for free. Mr Winnega stated that they'd put a deed restriction on the house for single-family and similar uses only if they were approved.

Jacob Winnega – is the son of the owners - helps manage the site – he has been sober for 6 years and wants to help with others like the help he got.

Commissioner Hollifield moved to close the public portion of the hearing (Support: J. Donnelly) and the motion carried unanimously.

Commissioner Talaga how many residents they currently have and Mr. Winnega responded that they currently have six. Commissioner Simmons asked how long they had been in existence and Mr. Winnega responded they have been in existence for one year. Ms. Wessler added that they are allowed to operate while they are going through this procedure.

Ms. Wessler also discussed conditional map rezoning that could be granted in conformance with the Master Plan, as the applicants had freely offered a condition in a public meeting in compliance with the ordinance, and asked if the applicant and the Planning Commission might like to proceed with the Conditional Rezoning process rather than the original process. After further discussion, Commissioner Talaga moved to table this item for 9 Casler allowing staff to discuss conditional rezoning with the applicant and revisit at the next Planning Commission Meeting and proceed with recommendation to council from there. (Support: P. Hollifield) and the motion carried unanimously.

VI. OLD BUSINESS

1. 307 N River – Site Plan Review.

This item was tabled 7/18/2018 – to remain on table.

2. Medical Marijuana Provisioning Centers: Increase in buffer

Tabled from 3/21/2108 – Item to remain on table.

VII. NEW BUSINESS

1. Annual Report

Planner Wessler reviewed information on business completed this past year and projects that we hope to work on in 2019. Some discussion was held on the Bell/Kramer area as well as eco-districts. Commissioner Hollifield moved to approve the annual report with transmittal to City Council (Support: J. McGadney) and the motion carried unanimously.

2. 2019 Schedule of Meetings

DRAFT

Commissioner Hollifield moved to approve schedule of meetings for 2019 (Support: J. Talaga) and the motion carried unanimously.

3. Reappointment of Members to the Non-Motorized Transportation Committee

Commissioner Hollifield moved to approve the re-appointment of members B. Krzewinski and Sarah Walsh to the Non-Motorized Committee (Support: J. McGadney) and the motion carried unanimously. Mr. Krzewinski asked if staff was aware of anyone who would be interested in being on the committee, to let him know.

4. Public Kiosks

Chair Dunwoodie stated that since Commissioner Hollifield was not in attendance at the last meeting and since he is the senior member of the board, he wondered if he had any thoughts on the possible use of kiosks in the city to allow residents to post information. Commissioner Hollifield stated that he is torn about the way things look. Not everyone is into social media but wondered about the possibility if there was some electronic way to post stuff that would only be up for a limited amount of time, he would be supportive of that. McGadney asked if there is any mechanism for us to get kiosks and Chair Dunwoodie responded that like the Human Relations Commission, we do not have control over ordinance enforcement or money for construction of kiosks. We could do a resolution in support.

Chair Dunwoodie stated that there seems to be some confusion if there are currently kiosks and if so, where they are located. Planner Wessler stated that they are new; they were installed as part of the Water St trail and bridge; one at the north end of pedestrian bridge and another at the terminus of the trail at South Grove. They look a lot like bulletin boards and anyone should be able to post a flyer there.

Bob Krzewinski added that he would caution kiosks be located on the border-to-border trail and some discussion be held with the Parks and Recreation since at some time, there will be maps, etc. along the trail and could be confusing with people posting information that does not apply to the trail.

Based on discussion of the Commissioners, Ms. Wessler recommended the following verbiage as a starting place for a resolution:

"Whereas the Planning Commission is in receipt of the Human Relations Commission resolution #2018-03, regarding Section 42-81 of the Ypsilanti Code of Ordinances, and Whereas members of the Human Relations Commission and members of the public have come before the Planning Commission to express support of this subject;
Now let it be resolved that Planning Commission refer this matter to City Council for further consideration of Resolution 2018-03."

Commissioner McGadney moved to approve the resolution as noted above (Support: J. Talaga) and the motion carried unanimously.

DRAFT

VIII. FUTURE BUSINESS DISCUSSION/UPDATES

January – discussion of general corridor 1000' buffer for medical marijuana provisioning centers, parking standards, corner visibility standards, commercial sales and use of firearms.

IX. COMMITTEE REPORTS

1. Non-motorized Committee Report

No committee report available.

2. Master Plan – Housing Affordability/Access subcommittee report

No committee report available.

3. RFP

Ms. Wessler stated that staff did put an RFP for a Master Plan update and Sustainability Plan all on one. A lot of our plans are being updated in the coming year!

X. ADJOURNMENT

Since there was no further business, Commissioner McGadney moved to adjourn the meeting (Support: J. Donnelly) and the motion carried unanimously. The meeting adjourned at 9:01 pm.

DRAFT

City of Ypsilanti

Community & Economic Development Department

Memo

To: Planning COmmission

From: Bonnie Wessler, City Planner

Date: 11 January 2019

Subject: Capital Improvements Review: 2019 Pavement Maintenance Program

Contents of this packet:

- Program overview memo (this memo)
- Huron:
    - Planning Staff Memo
    - Engineer worksheet
    - Detail plans for project area
- Congress:
    - Planning Staff Memo
    - Engineer worksheet
    - Detail plans for project area
- Harriet:
    - Planning Staff Memo
    - Engineer worksheet
    - Detail plans for project area
- Typical details for project as a whole
- Correspondence with AAATA

OVERALL DETAILS FOR THE PROJECT

This is a pavement maintenance project, largely funded by federal STP funds (80% federal, 20% local). Such projects are generally specified, far in advance; a five-year timeframe is generally assumed. As the project approaches being realized- generally one to two years in advance- design is finalized. For instance, for the early 2018 PM program that involved Congress and North Hamilton, PC reviewed it in April 2017, and it had been planned for some time before that.

Due to staffing changes both with our City engineers and the City in 2018, the timeframe for this project is rather more compressed, which somewhat limits design flexibility. Changes of more than 25% of the budget- additions or subtractions- can cause significant delays; delays can cause the funding to “expire.” This is the case even when additional Federal monies are not

requested and the City chooses to self-fund the changes. In addition, due to the way roads funding is allocated in the state, a change in STP funding used in one year may affect the amount of funding allocated or available in future years. Thus, the value of any changes proposed must be weighed against the value of having the project done this year rather than some future year, and potentially delaying or altering the timeline of those future planned projects as well. Should Planning Commission choose to recommend design changes that might alter the timeline of this project, the recommendations will be referred to Council.

Please note that this is a Capital Improvements Review, not a Complete Streets Review. Complete Streets review is triggered in the case of a reconstruction, such as the upcoming West Cross project (~2020); this is preventative maintenance. As some of you may recall, we adopted a Capital Improvements Plan in 2015 that has only been lightly updated; staff is working on another update this year that we hope will make capital improvements review less time-constrained and ensure the capital improvements performed more closely align with adopted City policies.

The source of funding limits design choices somewhat; as federal funding is being used, MDOT has issued rules that must be followed. Generally, these follow the American Association of State Highway and Transportation Officials (AASHTO) guidelines; MDOT will allow for certain exceptions or variances under certain specific conditions.

OVERALL STAFF REMARKS AND RECOMMENDATIONS ON THE PROJECT

- The posted speed for North Huron is noted incorrectly on the cover sheet. The posted speed for N Huron is 25 mph, not 35.
- The design speed for each road is noted at 5mph above the posted speed in each location. As these are local roads over level terrain in an urban environment, staff believes the design speed should be set no higher than the posted speed limit, and perhaps to 20mph in all cases. Per the FHWA, “Research confirms that lower speeds are safer and lowering speed limits can decrease both crash frequency and severity. However, speeds cannot be reduced simply by changing the posted speed limit. Geometric and cross-sectional elements, in combination with the context, establish a driving environment where drivers choose speeds that feel reasonable and comfortable.” (FHWA, 2019) This distinction may not have an effect upon these particular roads, but a policy shift may affect the design of future projects. Please note that this policy shift of setting the design speed below posted speed may require a design exception or variance which may not be granted in all cases; better advance planning may be required, &/or a policy to, for the time being, set the design speed at the posted speed.
- Bus stops are located within the project extents on both Harriet and Congress. The AATA was contacted prior to the PC meeting, and would appreciate the addition of bus pads in these locations due to ridership. These routes are not anticipated to change in the near future. The City has coordinated with AAATA on bus pads in the past; combining installation with roadworks provides cost savings and minimizes both the number of disturbances and the extent of disturbances to the area with construction.
- The project extent for the Congress PM ends before the intersection of Congress and Mansfield. Mansfield is a “border street;” that is, it is the line between the City and the

Township. The project extents were determined at least in part due to jurisdictional coordination issues. Planning staff recommends that in the future, those roads projects which approach or could include a border, including PM projects, be planned in coordination with the appropriate body, in this case the WCRC. In this particular case, the pavement approaching the intersection will not be repaired, and will have to be repaired either as a standalone project, which would be more expensive, or with another adjacent project- involving jurisdictional coordination at that point in time.

- Crosswalk placement (or lack thereof) is subject to review by the AACIL. There are three unique intersections in the project extents – Washington at Huron and Congress/N Congress/S Congress, both intersections with an acute angle; and Florence, which is not signed as nor legible as a road and may need to be considered for "demotion." Staff is working with engineers and the legal team to ensure both adherence to the terms of the settlement with the AACIL and safety for all users.

THE CITY OF YPSILANTI
IN COOPERATION WITH THE
MICHIGAN DEPARTMENT OF TRANSPORTATION
&
THE FEDERAL HIGHWAY ADMINISTRATION
2019 MAJOR ROAD PROGRAM

MDOT STANDARD PLANS AND DETAILS

R-1-G	COVER D
R-28-J	SIDEWALK RAMP AND DETECTABLE WARNING DETAILS
R-29-I	DRIVEWAY OPENINGS & APPROACHES AND CONCRETE SIDEWALKS
R-30-G	CONCRETE CURB AND CONCRETE CURB & GUTTER
R-83	ISOLATION JOINT DETAILS
R-96-E	SOIL EROSION & SEDIMENTATION CONTROL MEASURES
SIGN-120-D	ROADSIDE SIGN LOCATIONS AND SUPPORT SPACING
SIGN-200-D	STEEL POSTS
WZD-125-E	TEMPORARY TRAFFIC CONTROL DEVICES
PAVE-961-B	SHARED LANE (SHARROW) MARKING

MICHIGAN PROJECT

JOB NUMBER	–
CONTROL SECTION	–
FEDERAL ITEM NO.	–
FEDERAL PROJECT NO.	–

PROJECT LIMIT–S CONGRESS
POB STA 20+40
POE STA 43+22

PROJECT LIMIT–N HURON
POB STA 0+19
POE STA 12+00

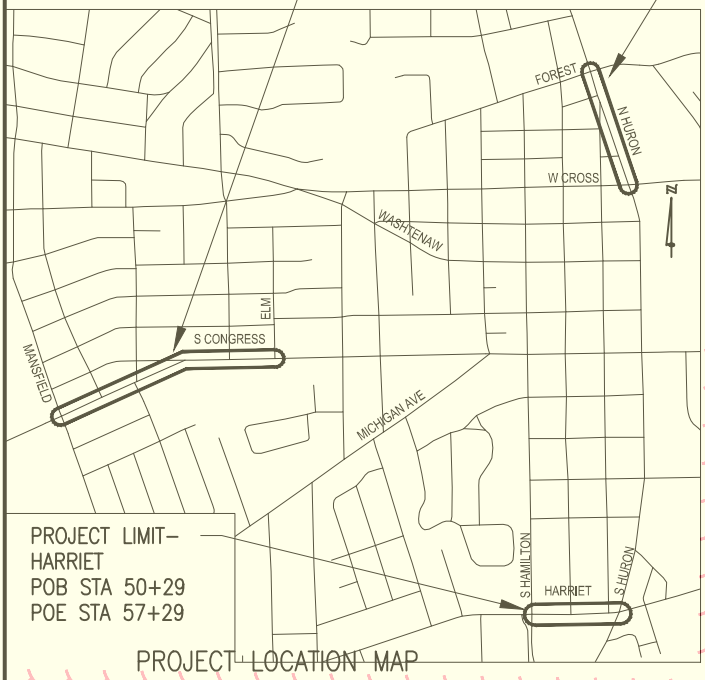

PROJECT LIMIT–
HARRIET
POB STA 50+29
POE STA 57+29

PROJECT LOCATION MAP

Design Guidelines:	Congress	Harriet	Huron
Posted Speed: (MPH)	25	30	35
Design Speed: (MPH)	30	35	30
Present ADT:	2,270	5,182	7,510
% Commercial:	5	5	5
Future ADT:	2,773	6,329	9,173
% Commercial:	5	5	5
Calender Year:	2029	2029	2029

GENERAL PROVISIONS

THE IMPROVEMENTS COVERED BY THIS LOG SHALL BE DONE IN ACCORDANCE WITH THE PROPOSAL AND ACCOMPANYING SPECIFICATIONS FOR THIS PROJECT INCLUDING THE 2012 MICHIGAN DEPARTMENT OF TRANSPORTATION STANDARD SPECIFICATIONS FOR CONSTRUCTION AND HAVE BEEN DESIGNED IN ACCORDANCE WITH THE MICHIGAN DEPARTMENT OF TRANSPORTATION LOCAL AGENCY PROGRAMS GUIDELINES FOR GEOMETRICS, DATED MARCH 4, 2014.

TRAFFIC CONTROL SHALL CONFORM TO THE LATEST VERSION OF THE MICHIGAN MANUAL OF UNIFORM TRAFFIC CONTROL DEVICES.

NOTICE SHALL BE GIVEN TO MISS DIG PRIOR TO UNDERGROUND WORK IF PERFORMED IN ACCORDANCE WITH THIS CONTRACT, PHONE (800) 482-7171 OR 811. UTILITY SERVICE CONNECTIONS ARE NOT SHOWN IN THE LOG AND ARE NOT THE RESPONSIBILITY OF THE CITY.

CONTRACT FOR: 4,400 LFT OF ROADWAY MILL & FILL AND SIDEWALK RAMP IMPROVEMENTS

PREPARED UNDER THE SUPERVISION OF:

RICHARD R. HOBGOOD
6201051376
Registration No.

Date

CITY OF YPSILANTI APPROVAL

DARWIN D.P. MCCLARY

Date

OHM
Advancing Communities
Engineering Advisors

34000 Plymouth Road | Livonia, MI 48150
p (734) 522-6711 | f (734) 522-6427

REVISIONS
FEDERAL NUMBERS ADDED:

PROJECT NO.	SHEET NO.
0094-18-0020	1

FEDERAL ITEM
FEDERAL PROJECT
CS JN
©

COVERSHEET.DWG

City of Ypsilanti

Community & Economic Development Department

Memo

To: Planning Commission

From: Bonnie Wessler, City Planner

Date: 07 January 2019

Subject: N Huron mill & overlay, Cross to Forest

N Huron is a one-way northbound local road. Within the project bounds, it intersects Cross (signalized), Florence (T from the west), Washington (angle from the west), Arcade (T from the west), and Forest (signalized). There are no bike facilities on this road, nor are there bus stops. It is a well-travelled northbound connector, regularly used by pedestrians, bicyclists, and drivers. There are no sidewalk gaps in the area. ADA ramps are absent at Florence and at Washington, and proposed to be upgraded/added at each. Ramps at Arcade were installed in 2018. On-street parking is available on the east side of the street from Cross to approximately Washington, and is unrestricted. Pedestrian traffic is heavy year-round due to Depot Town and EMU adjacency. The on-street parking is heavily used in the project area, and is directly correlated to housing density; the area likely also sees event traffic from Depot Town.

Currently, the City DPS & Engineers are proposing the addition of a bumpout on the northeast corner of Cross and on the east side of the street at the south side of the intersection with Washington. New crosswalks, without bumpouts, are being proposed at Florence, per the agreement with the AACIL. How these are constructed and signed will be discussed with the AACIL. No new crosswalk is currently being proposed at the north side of the Washington intersection due to the long crossing distance and the proximity to the Arcade crosswalk; this, too, is subject to AACIL review and consent. Bike lanes are not proposed due to the right-of-way constraints; bike lanes and other facilities may be revisited if/when Huron south of this location is reconfigured in, presumably, 2022.

A bumpout is being proposed at the south side of the Arcade crosswalk (not shown on these drawings) and parking allowed south of the Arcade bumpout. This would serve to constrain the roadway, define the parking area, and potentially help slow traffic. As part of a future Washington paving project or any two-way conversion project, the intersection between Washington and Huron should be “tee’d up”; the momentarily wide expanse of pavement does not contribute to traffic safety. Staff does not recommend “bike route” or sharrows at this location; in this general area (Hamilton to Huron), staff defers to the Nonmotorized Committee’s recommendation to guide bicycle traffic to Adams for safety.

(1) Inventory the proposed geographical extent of the project.

- Functional Classification: Major Collector
- Huron-Cross to Forest
- Right of Way width: 66'
- Traffic lanes: 2
- ON-street parking: Yes, east side of road between Cross and Arcade.
- Existing vehicular ADT: 7510, per SEMCOG 2015
- Projected vehicular ADT: 9160
- Speed limit: 25 MPH
- Percent heavy vehicles: 5%
- Center turn lane: No
- Transit facilities: None
- Bicycle facilities: None.
- Sidewalks: Both sides of road, full length of project. All ramps to be ADA-compliant.
- Landscaping w/in ROW: All disturbed areas to be restored with topsoil, seed, and mulch. Trees to be removed only if necessary. (None anticipated)
- Lighting: Street lights on wood poles. No anticipated changes.

(2) Check for consistency with adopted plans & City legal obligations:

- Master Plan: Change Huron from one-way to two-way traffic. Pg 37 of master plan.
- Non-Motorized Transportation Plan
  - Does the plan note any deficiencies in the area under consideration? Please list & cite page numbers.
    - Pg 52, B2B Trail tie in
- ADA settlement/ADA compliance plan
  - Does the proposed project contain any locations slated for upgrade in the ADA compliance plan?
    All ramps within the project limits are to be compliant to the most current ADA standards.
    Note that all corners have to be ramped, include the diagrams from latest settlement.

(3) Motor Vehicle Facilities (non-freight)

- Major Street: <10,000 ADT
  N Huron is a Major Collector Road per NFC classification
  - **2 travel lanes + 1 parking lane**
  - **Proposed 11' travel lanes**
  - **Posted speed limit 25 MPH**
- On-street parking: does it exist, where, what type (permit, unrestricted), and how wide the lane?
  - On street parking is on the east side of road between Cross and Arcade Parking is unrestricted.

(4) Transit facilities

- Bus
- No Bus route
  - Consult with AAATA on all capital improvement projects w/in 100' of a stop or on a bus route.
  - When a bus stop is located within the geographic scope of a capital improvement (ex, a bus stop on a street), ensure that the bus stop will be ADA-compliant (add concrete pad) and the stop will not be blocked

by on-street parking ("no parking, bus stop" markings) and that any bike lanes in the area are appropriately marked by broken lines & other MUTCD-compliant symbols as necessary.

(5) Check for bike facilities

- Transitions- at intersections, not mid-block
  - If Bike lane to no-bikelane: signage per MUTCD (bike lane ends, share the road signage, sharrow), & ensure there is a receiving xwalk ramp nearby
  - If No-bikelane to bikelane: signage per MUTCD (bike lane pavement markings, bike lane begins signage; placement at intersections, not mid-block)
- Lanes of travel
  - Bike lanes
    - Required on:
      - Major Streets: all.
      - **No existing bike lanes. Insufficient road/ROW width for new bike lanes on proposed roadway. Road functions as Neighborhood Street, low volume, low speed. Standard practice is to not stripe bike lanes in this condition.**
      - Local Streets: where ADT ≥ 10,000
    - 4' wide minimum, exclusive of gutter pan
    - Wider by 1', max of 10', for
      - each 5 mph above a 25mph speed limit (ex: 35mph = 6', exclusive of gutter pan) OR
      - for each 5,000 by which ADT exceeds 10,000,
    - Pavement markings (bike lane decal) every block, in addition to 6" lane marking
  - Sharrows & other signage
    - Major Streets: Required wherever the ROW is too narrow for bike lanes (ex, Michigan Ave downtown) – "bikes may use full lane," etc
    - Local streets: at "entrances" to neighborhoods (ex. Perry Street south of Harriet; First south of Harriet; Mansfield north of Washtenaw)- where traffic would be turning/transitioning from a Major Street to a Local Street.
      - **No Proposed sharrows**
- Parking
  - Major Streets: ROW parking for bicycles recommended in commercial/mixed-use areas where on-street car parking is provided (ex: downtown, depot town)
    - Placed on-street (seasonal racks) or in sidewalk buffer area
    - If overnight or long-term car facilities are in place, then also place overnight/long-term bike facilities.

(6) Check for pedestrian facilities

- Crosswalks
  - ADA compliant- all corners
    - **NE & NW quadrants of Cross and Huron. All four quadrants at Florence and Huron. New cross walks installed at SE & SW corner Washington and Huron. Arcade and Huron ramps have previously been brought into compliance and will not have any work performed.**

- Striping/marking
  - Major Streets: Longitudinal ("piano keys")
    - If crosswalk is less than 6' wide, enclose longitudinal with transverse for visibility
  - Local Streets: longitudinal preferred, transverse permitted
  - If alternate paving materials or texturizing is used on crosswalks- ex, stamped concrete- enclose with transverse markings for visibility.
- Lighting: required on all Major Streets; recommended on Local Streets
- Bumpouts on all Major Streets where on-street parking is provided
  - **Crossing markings currently set up as longitudinal at the signalized and stop controlled intersections. Continental markings will be installed at mid-block crossings.**
  - **Bump outs are being proposed at NE corner Cross and Huron as well as SE corner of Arcade and Huron.**

- Sidewalks
  - **All sidewalks are to remain as-is. Trip hazard slabs will be replaced.**
  - ADA compliant- grading, width, materials
  - Major Streets in commercial/mixed-use:
    - aim for 10' wide, 6' min
    - 5' buffer between sidewalk and street
    - Lighted
  - Major Streets in residential-only:
    - 5'-10' wide (context-sensitive)
    - 10'-6' buffer
    - Lighted
  - Local Streets:
    - min of 5' wide
    - min 6' buffer.

N. HURON STREET

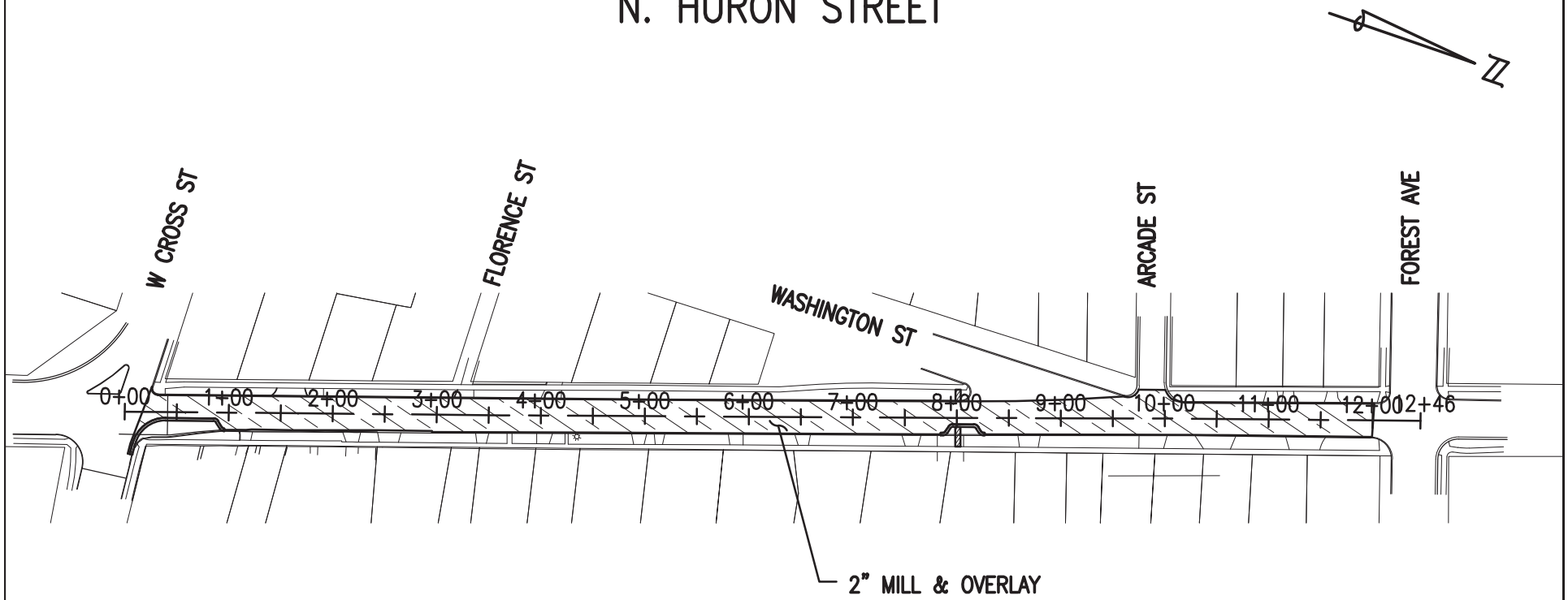

Know what's below.
Call before you dig.

2019 ROAD REPAIRS
N. HURON STREET
POB STA 0+19 TO POE STA 12+00

SCALE
H: 1"=150' V: N/A

SHEET
6
OF 20

CLIENT:
CITY OF YPSILANTI

JOB #
0094-18-0020

34000 Plymouth Road | Livonia, MI 48150 | P (734) 522-6711 | F (734) 522-6427 | WWW.OHM-ADVISORS.COM

COPYRIGHT 2017 OHM ALL DRAWINGS AND WRITTEN MATERIALS APPEARING HEREIN CONSTITUTE THE ORIGINAL AND UNPUBLISHED WORK OF OHM AND THE SAME MAY NOT BE DUPLICATED, DISTRIBUTED, OR DISCLOSED WITHOUT PRIOR WRITTEN CONSENT OF OHM

DRAWING PATH: P:\0000_0100\0094180020_2019_FAC\Drawings\Civil\Plans_Const\180020CON.dwg Dec 07, 2018 – 8:58am

JOB BENCHMARK #200
CHISELED "+" ON NE BOLT
STRAIN POLE AT NW QUADRANT
N. HURON AND E. CROSS
ELEV 731.50

JOB BENCHMARK #201
SET COTTON SPINDLE IN W FACE
LIGHT POLE E SIDE NO HURON
BETWEEN 408 & 410 N HURON
ELEV 730.84

TRAVERSE POINT #100
N 272746.42
E 13327242.91 ELEV 730.50

TRAVERSE POINT #101
N 272913.60
E 13327231.01 ELEV 729.79

N. HURON STREET

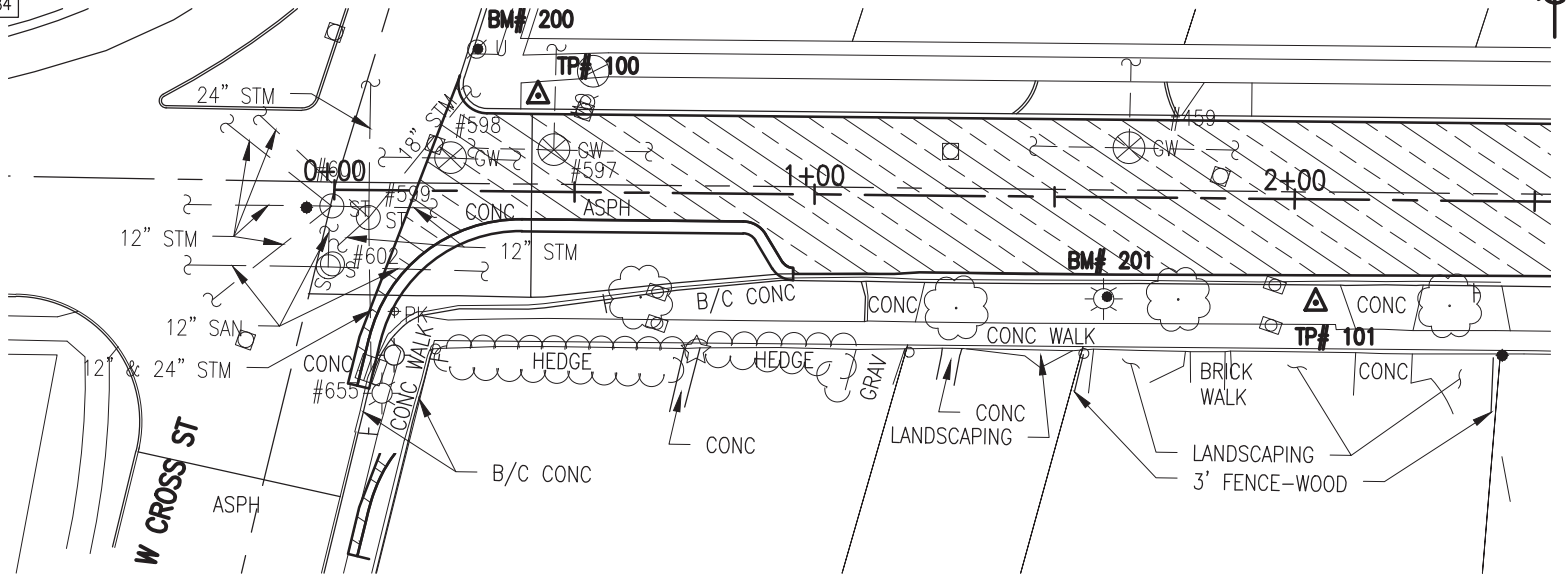

IRON REBAR-MON BOX
#602 SANITARY MANHOLE T/CAST 730.12
12" CONC INV W 722.64
12" CONC INV S 722.64
12" CONC INV N 722.99
#600 STORM MANHOLE T/CAST 730.12
12" CONC INV N 721.47
12" CONC INV S 723.72
12" CONC INV SE 722.99
12" CONC INV SW 723.94
#599 STORM MANHOLE T/CAST 730.13
12" CONC INV SW 720.81
12" CONC INV SE 723.72
12" CONC INV E 725.20
24" CONC INV W 721.49
18" CONC INV NW 721.40
24" CONC INV E 721.41
#655 SQ CATCH BASIN T/CAST 729.58
12" CLAY INV W 725.40
SIGN-REGULATORY
STL LIGHT POLE
PK NAIL-FD
CROSSWALK SIGNAL
IRON PIPE-FD
#598 GATE WELL T/CAST 730.11
D.I.P T/P N-S 725.51
SIGN-REGULATORY
#597 GATE WELL T/CAST 730.00
D.I.P T/P N/S/W 725.00
SIGN-REGULATORY
CL2 DECID TREE 12"
CONIFEROUS SHRUB 7x20
IRON PIPE-FD
#499 GATE VALVE T/CAST 729.61
CL1 DECID TREE 2"
IRON PIPE-DST
LIGHT POLE
#459 GATE WELL T/CAST 729.57
D.I.P T/P N, S, W 724.77
CL2 DECID TREE 16"
CL2 DECID TREE 6"
SIGN-REGULATORY
CAPPED IRON REBAR

811 Know what's below. Call before you dig.

2019 ROAD REPAIRS
PROPOSED HURON STREET BUMP OUT

SCALE H: 1"=40' V: N/A
SHEET 7 OF 20

CLIENT: CITY OF YPSILANTI
JOB # 0094-18-0020

OHM

34000 Plymouth Road | Livonia, MI 48150 | P (734) 522-6711 | F (734) 522-6427 | WWW.OHM-ADVISORS.COM

COPYRIGHT 2017 OHM ALL DRAWINGS AND WRITTEN MATERIALS APPEARING HEREIN CONSTITUTE THE ORIGINAL AND UNPUBLISHED WORK OF OHM AND THE SAME MAY NOT BE DUPLICATED, DISTRIBUTED, OR DISCLOSED WITHOUT PRIOR WRITTEN CONSENT OF OHM

DRAWING PATH: P:\0000_0100\0094180020_2019_FAC\Drawings\Civil\Plans_Const\180020CON.dwg Dec 07, 2018 - 8:58am

City of Ypsilanti

Community & Economic Development Department

Memo

To: Planning Commission

From: Bonnie Wessler, City Planner

Date: 07 January 2019

Subject: Congress mill & overlay, east of Mansfield to east of Elm

---

South Congress is a two-way local road that begins west of the City at Hewitt, and continues to its intersection with Michigan. Within the project bounds, it intersects Owendale (T from the north), Wallace (4-way stop), N Congress (3-way stop), and Oakwood (4-way). There are no bike facilities on this road, and the AAATA route 6B currently has 2.5 stops within the project area (Oakwood, Wallace, Mansfield westbound). It is a well-travelled east-west connector for the neighborhood, regularly used by pedestrians, bicyclists, and drivers. There is one sidewalk gap along the north side of the street between Wallace and N Congress; due to right-of-way constraints and existing encroachments, no sidewalks are proposed to be added as part of this project. ADA ramps are absent at several intersections, and proposed to be upgraded/added at each. On-street parking is available on the north side of the street in the project area, and is unrestricted.

Pedestrian and bicyclist traffic is particularly heavy due to the presence of Recreation Park on Congress at the east end of the project bounds, and the schools to the west. The on-street parking is generally lightly used between Mansfield and N Congress, and use is directly correlated to housing density. Parking along the north side of the street between Oakwood and N Congress is generally heavily used during sporting events, particularly Little League, at Recreation Park, but otherwise correlates to housing density.

Currently, the City DPS & Engineers are proposing the addition of bumpouts on the north side of the street at the intersections with Owendale, Wallace, on the east side of the N Congress intersection, and Normal. The project limits end just shy of Mansfield, as Mansfield is the dividing line between WCRC jurisdiction and City jurisdiction; in addition. In the past, we have requested “Bikes May Use Full Lane” signage; however, this signage is not currently permitted in Michigan. “Bike Route” signage was installed along Congress in 2018 along with sharrows in lieu of this sign; staff and OHM recommend continuing both westward. Staff recommends constructing bus pads at Oakwood, Wallace, and Mansfield.

Staff further recommends that the Congress/North Congress/South Congress intersection be evaluated for additional traffic control measures due to neighborhood reports of drivers not stopping at the stop sign; this may be part of this project or programmed for the future due to timing and budget consdierations.

(1) Inventory the proposed geographical extent of the project.

- Functional Classification: Major Collector
- S. Congress- 25 ft West of Elm to Mansfield
- Right of Way width: 66'
- Traffic lanes: 2
- ON-street parking: Yes, north side of road
- Existing vehicular ADT: 2370, per Semcog counts for 2006
- Projected vehicular ADT: 2844
- Speed limit: 25 MPH
- Percent heavy vehicles: 5%
- Center turn lane: No
- Transit facilities: AAATA bus stop for routes #6B (Monday-Friday 2-way pick up, Saturday & Sunday 1-way pick up): @ Oakwood NE and SW.
- Bicycle facilities: None. Proposed sharrows.
- Sidewalks: South side of road for full length of project. North side of road for full length of project except for 370 ft on the north side of S Congress between N. Congress and Wallace. All ramps to be ADA-compliant.
- Landscaping w/in ROW: All disturbed areas to be restored with topsoil, seed, and mulch. Trees to be removed only if necessary. Not anticipated
- Lighting: Existing lighting on wood poles. No improvements proposed.

(2) Check for consistency with adopted plans & City legal obligations:

- Master Plan:
- Non-Motorized Transportation Plan
  - Does the plan note any deficiencies in the area under consideration? Please list & cite page numbers.
    - Pg 48, Sidewalk gap on S. Congress between N. Congress and Wallace.
    - Pg 54 Bike Lanes only
- ADA settlement/ADA compliance plan
  - Does the proposed project contain any locations slated for upgrade in the ADA compliance plan?
    All ramps within the project limits are to be compliant to the most current ADA standards.
    Note that all corners have to be ramped at non-jogged intersections. There are no jogged intersections within the project bounds.

(3) Motor Vehicle Facilities (non-freight)

- Major Street: <10,000 ADT
  Congress is a Major Collector Road per NFC classification
  - **2 travel lanes + 1 parking lane**
  - **Proposed 11' travel lanes;**
  - **Posted speed limit 25 MPH**
- On-street parking: does it exist, where, what type (permit, unrestricted), and how wide the lane?
  - Parking on north side of road, 7.5' parking lane, unrestricted parking

(4) Transit facilities

- Bus

- Consult with AAATA on all capital improvement projects w/in 100' of a stop or on a bus route.
- When a bus stop is located within the geographic scope of a capital improvement (ex, a bus stop on a street), ensure that the bus stop will be ADA-compliant (add concrete pad) and the stop will not be blocked by on-street parking ("no parking, bus stop" markings) and that any bike lanes in the area are appropriately marked by broken lines & other MUTCD-compliant symbols as necessary.

(5) Check for bike facilities

- Transitions- at intersections, not mid-block
  - If Bike lane to no-bikelane: signage per MUTCD (bike lane ends, share the road signage, sharrow), & ensure there is a receiving xwalk ramp nearby
  - If No-bikelane to bikelane: signage per MUTCD (bike lane pavement markings, bike lane begins signage; placement at intersections, not mid-block)
- Lanes of travel
  - Bike lanes
    - Required on:
      - Major Streets: all.
      - **No existing bike lanes. Insufficient road width for new bike lanes on proposed roadway. Road functions as neighborhood Street, low volume, low speed. Standard practice is to not stripe bike lanes in this condition.**
      - Local Streets: where ADT ≥ 10,000
    - 4' wide minimum, exclusive of gutter pan
    - Wider by 1', max of 10', for
      - each 5 mph above a 25mph speed limit (ex: 35mph = 6', exclusive of gutter pan) OR
      - for each 5,000 by which ADT exceeds 10,000,
    - Pavement markings (bike lane decal) every block, in addition to 6" lane marking
  - Sharrows & other signage
    - Major Streets: Required wherever the ROW is too narrow for bike lanes (ex, Michigan Ave downtown) – "bikes may use full lane," etc
    - Local streets: at "entrances" to neighborhoods (ex. Perry Street south of Harriet; First south of Harriet; Mansfield north of Washtenaw)- where traffic would be turning/transitioning from a Major Street to a Local Street.
      - Install sharrows along both sides of Congress.
- Parking
  - Major Streets: ROW parking for bicycles recommended in commercial/mixed-use areas where on-street car parking is provided (ex: downtown, depot town)
    - Placed on-street (seasonal racks) or in sidewalk buffer area
    - If overnight or long-term car facilities are in place, then also place overnight/long-term bike facilities.

(6) Check for pedestrian facilities

- Crosswalks
  - ADA compliant- all corners
    - **NE & SE corner of N. Congress and S. Congress, All quadrants at Oakwood & Congress, All quadrants at Wallace & S Congress, All quadrants at Owendale & S. Congress.**

- Striping/marking
  - Major Streets: Longitudinal ("piano keys")
    - If crosswalk is less than 6' wide, enclose longitudinal with transverse for visibility
  - Local Streets: longitudinal preferred, transverse permitted
  - If alternate paving materials or texturizing is used on crosswalks- ex, stamped concrete- enclose with transverse markings for visibility.
- Lighting: required on all Major Streets; recommended on Local Streets
- Bump outs on all Major Streets where on-street parking is provided
  - **Crossing markings currently set up as longitudinal at signalized or stop controlled intersections. Uncontrolled crosswalks to be continental style.**
  - **Bump outs proposed at NE & NW corner of Oakwood & Congress, at NE corner of N Congress & S. Congress and at NE & NW corner of Wallace & S. Congress, at NE & NW corner of Owendale & S. Congress. No bump outs proposed on south side of road due lack of lane with.**

- Sidewalks
  - **All sidewalks are to remain as-is. Trip hazard slabs will be replaced.**
  - ADA compliant- grading, width, materials
  - Major Streets in commercial/mixed-use:
    - aim for 10' wide, 6' min
    - 5' buffer between sidewalk and street
    - Lighted
  - Major Streets in residential-only:
    - 5'-10' wide (context-sensitive)
    - 10'-6' buffer
    - Lighted
  - Local Streets:
    - min of 5' wide
    - min 6' buffer.

CONGRESS STREET

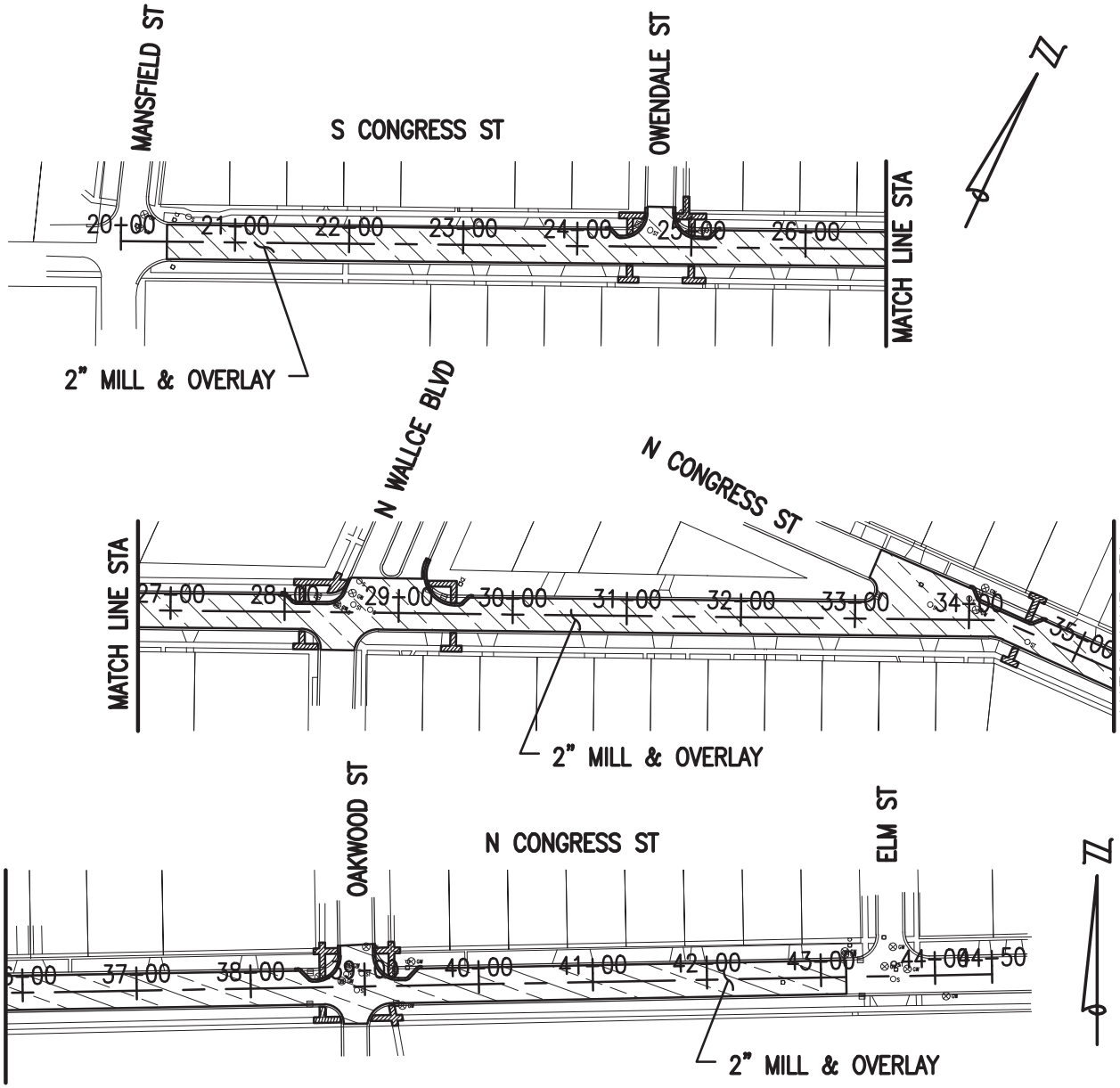

Know what's **below.**
Call before you dig.

2019 ROAD REPAIRS
S. CONGRESS STREET
POB STA 20+40 TO POE STA 43+22

SCALE
H: 1"=150' V: N/A

SHEET
4
OF 20

CLIENT:
CITY OF YPSILANTI

JOB #
0094-18-0020

34000 Plymouth Road | Livonia, MI 48150 | P (734) 522-6711 | F (734) 522-6427 | WWW.OHM-ADVISORS.COM

COPYRIGHT 2017 OHM ALL DRAWINGS AND WRITTEN MATERIALS APPEARING HEREIN CONSTITUTE THE ORIGINAL AND UNPUBLISHED WORK OF OHM AND THE SAME MAY NOT BE DUPLICATED, DISTRIBUTED, OR DISCLOSED WITHOUT PRIOR WRITTEN CONSENT OF OHM

DRAWING PATH: P:\0000_0100\0094180020_2019_FAC\Drawings\Civil\Plans_Const\180020CON.dwg Dec 07, 2018 – 8:57am

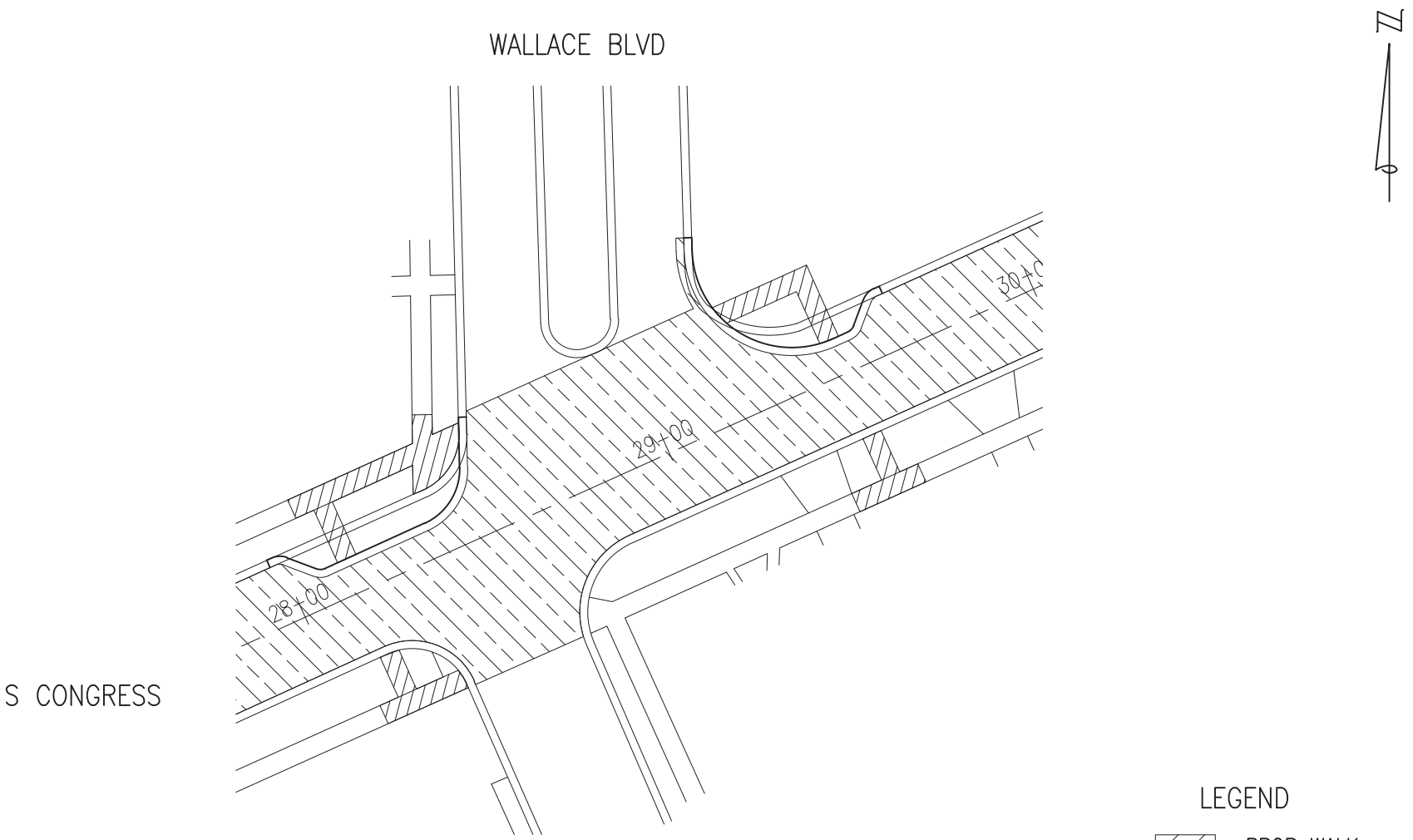

LOCATION OF DETAIL:
CORNER OF S CONGRESS & N WALLACE

LEGEND

PROP WALK

MILL & OVERLAY

PROP CURB

2019 ROAD REPAIRS
PROPOSED BUMP OUT

SCALE
H: NTS V: NTS

SHEET
9
OF 20

CLIENT:
CITY OF YPSILANTI

JOB #
0094-18-0020

34000 Plymouth Road | Livonia, MI 48150 | P (734) 522-6711 | F (734) 522-6427 | WWW.OHM-ADVISORS.COM

COPYRIGHT 2017 OHM ALL DRAWINGS AND WRITTEN MATERIALS APPEARING HEREIN CONSTITUTE THE ORIGINAL AND UNPUBLISHED WORK OF OHM AND THE SAME MAY NOT BE DUPLICATED, DISTRIBUTED, OR DISCLOSED WITHOUT PRIOR WRITTEN CONSENT OF OHM

DRAWING PATH: P:\0000_0100\0094180020_2019_FAC\Drawings\Civil\Details\180020DET_02.dwg Dec 07, 2018 – 8:58am

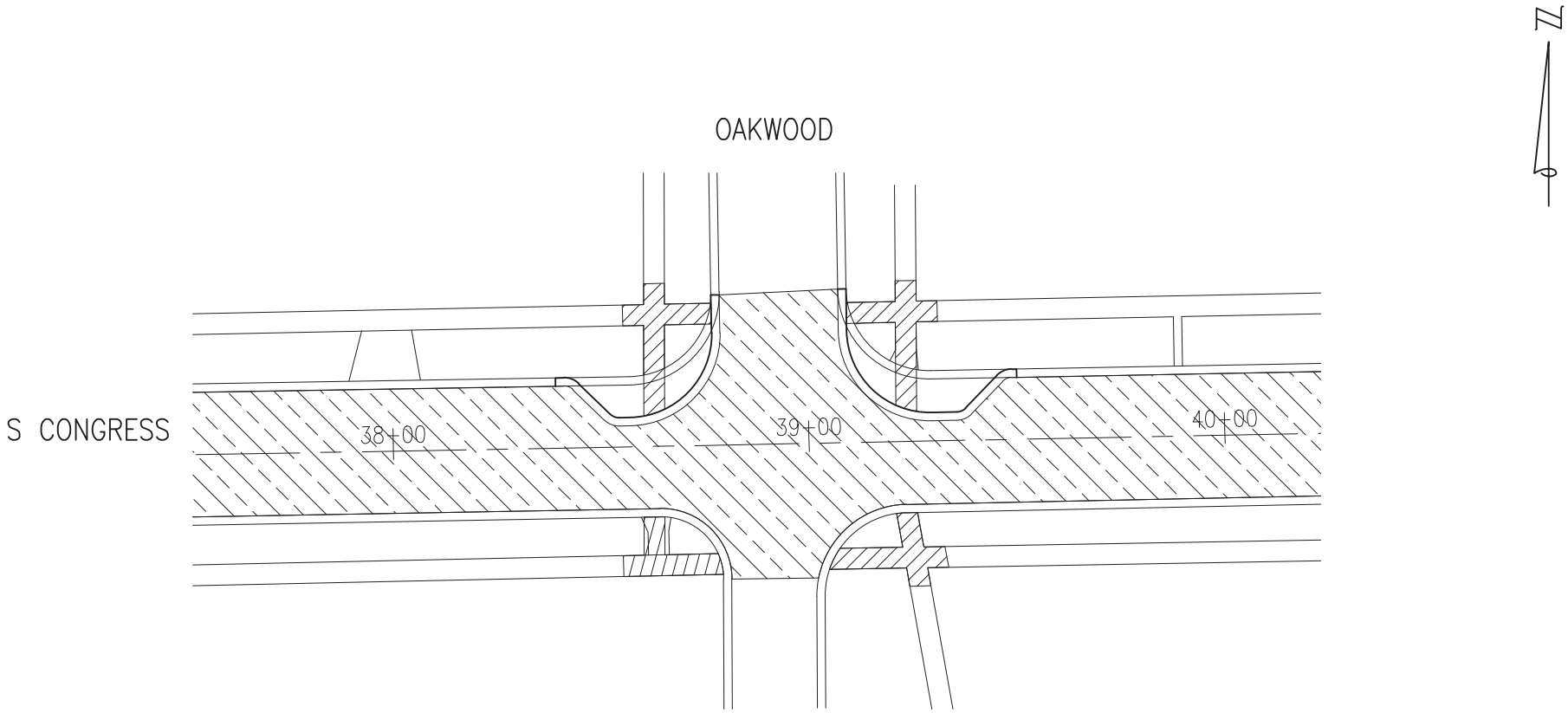

LEGEND

PROP WALK

MILL & OVERLAY

PROP CURB

LOCATION OF DETAIL:
CORNER OF S CONGRESS & OAKWOOD

2019 ROAD REPAIRS
PROPOSED CROSSWALK LAYOUT

SCALE
H: NTS V: NTS

SHEET
10
OF 20

CLIENT:
CITY OF YPSILANTI

JOB #
0094-18-0020

34000 Plymouth Road | Livonia, MI 48150 | P (734) 522-6711 | F (734) 522-6427 | WWW.OHM-ADVISORS.COM

COPYRIGHT 2017 OHM ALL DRAWINGS AND WRITTEN MATERIALS APPEARING HEREIN CONSTITUTE THE ORIGINAL AND UNPUBLISHED WORK OF OHM AND THE SAME MAY NOT BE DUPLICATED, DISTRIBUTED, OR DISCLOSED WITHOUT PRIOR WRITTEN CONSENT OF OHM

DRAWING PATH: P:\0000_0100\0094180020_2019_FAC\Drawings\Civil\Details\180020DET_02.dwg Dec 07, 2018 – 8:58am

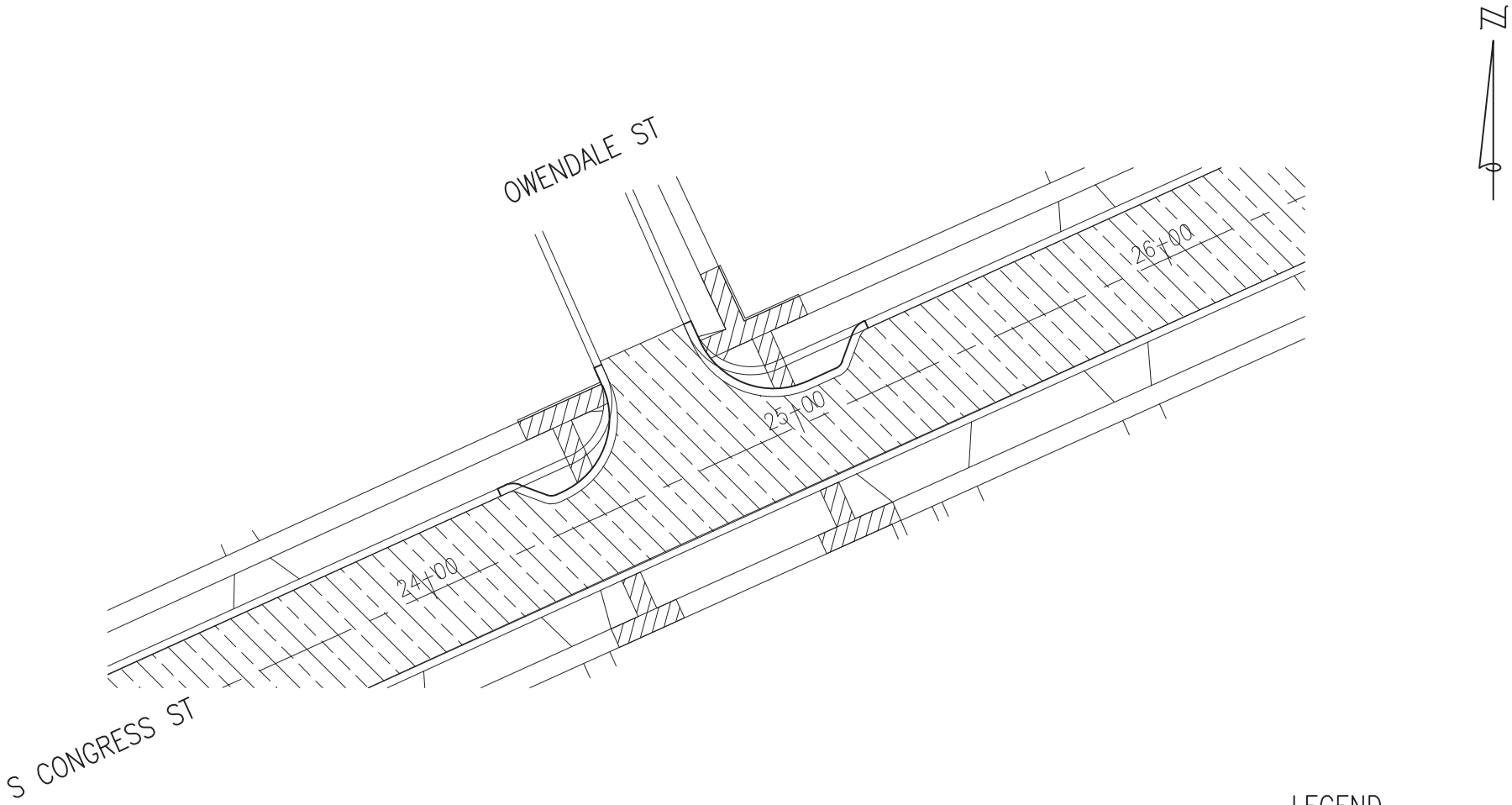

LEGEND

PROP WALK

MILL & OVERLAY

PROP CURB

LOCATION OF DETAIL:
CORNER OF S CONGRESS & OWENDALE

2019 ROAD REPAIRS
PROPOSED BUMP OUT

SCALE
H: NTS V: NTS

SHEET
11
OF 20

CLIENT:
CITY OF YPSILANTI

JOB #
0094-18-0020

34000 Plymouth Road | Livonia, MI 48150 | P (734) 522-6711 | F (734) 522-6427 | WWW.OHM-ADVISORS.COM

COPYRIGHT 2017 OHM ALL DRAWINGS AND WRITTEN MATERIALS APPEARING HEREIN CONSTITUTE THE ORIGINAL AND UNPUBLISHED WORK OF OHM AND THE SAME MAY NOT BE DUPLICATED, DISTRIBUTED, OR DISCLOSED WITHOUT PRIOR WRITTEN CONSENT OF OHM

DRAWING PATH: P:\0000_0100\0094180020_2019_FAC\Drawings\Civil\Details\180020DET_02.dwg Dec 07, 2018 – 8:58am

City of Ypsilanti

Community & Economic Development Department

Memo

To: Planning Commission

From: Bonnie Wessler, City Planner

Date: 07 January 2019

Subject: Harriet eastbound mill & overlay, Hamilton to west of Washington, complete streets review

---

The Complete Streets ordinance requires a full review for projects that are considered to be a "reconstruction" of the roadway. This is generally a project in which a road is taken down to its base, and rebuilt, such as the Prospect project. This project is a mill and overlay, with patching as needed; it is not a full reconstruction. However, it does provide an opportunity to make improvements to the roadway, and has been submitted to us for review.

Harriet is a two-way local road; only the southern (eastbound) lanes are being proposed for work. The project stops short of Hamilton due to right-of-way ownership; it stops short of Washington as the pavement changes to concrete at that intersection, which has different maintenance requirements. Within the project bounds, it intersects South Adams. There are no bike facilities on this road, but buses 45 and 47 stop just east of Hamilton. It is a very well-travelled connector, and part of the City's truck route system. It is regularly used by pedestrians, bicyclists, and drivers of all vehicle types; bicyclists primarily travel on the sidewalk due to the high volume of traffic in the area. There are no sidewalk gaps in the area. ADA ramps are absent at Adams, and are proposed to be added and pedestrian crossing signage installed.

Currently, the only change proposed in the project area is the addition of the Adams crosswalk. Staff and engineers acknowledge that Harriet from Hamilton eastward would be an excellent candidate for study as a road diet, and/or perhaps the addition of dedicated bike lanes and/or on-street parking depending upon the area's needs at the time. However, addressing the pavement condition should not be delayed to be coordinated with an as-yet unfunded and unscoped project. This mill & overlay of the westbound lanes was completed in 2014.

Staff does not recommend Bike Route signage nor sharrows in this location due to the very small project area and lack of connectivity with other projects. Staff does recommend installing a bus pad at the stop within the project area.

(1) Inventory the proposed geographical extent of the project.

- Functional Classification: Major Collector
- Harriet-WB Huron to Hamilton
- Right of Way width: 86'
- Traffic lanes: 5
- ON-street parking: No
- Existing vehicular ADT: 5182, per SEMCOG 2015
- Projected vehicular ADT: 6322
- Speed limit: 30 MPH
- Percent heavy vehicles: 5%
- Center turn lane: Yes
- Transit facilities: AATA routes 45 & 47 use Harriet, but do not have stops on Harriet.
- Bicycle facilities: None.
- Sidewalks: Both sides of road, full length of project. All ramps to be ADA-compliant.
- Landscaping w/in ROW: All disturbed areas to be restored with topsoil, seed, and mulch. Trees to be removed only if necessary. (None anticipated)
- Lighting: Street lights on wood poles. No anticipated changes.

(2) Check for consistency with adopted plans & City legal obligations:

- Master Plan: None
- Non-Motorized Transportation Plan
  - Does the plan note any deficiencies in the area under consideration? Please list & cite page numbers.
    - Bike lanes, pg 53
- ADA settlement/ADA compliance plan
  - Does the proposed project contain any locations slated for upgrade in the ADA compliance plan?
    All ramps within the project limits are to be compliant to the most current ADA standards.
    Note that all corners have to be ramped, include the diagrams from latest settlement.

(3) Motor Vehicle Facilities (non-freight)

- Major Street: <10,000 ADT
  Harriet is a Major Collector Road per NFC classification
  - **4 travel lanes + 1 center turn lane**
  - **Proposed 11' travel lanes**
  - **Posted speed limit 30 MPH**
- On-street parking: does it exist, where, what type (permit, unrestricted), and how wide the lane?
  - No parking

(4) Transit facilities

- Bus
- Bus routes 45 & 47 with no stops
  - Consult with AAATA on all capital improvement projects w/in 100' of a stop or on a bus route.
  - When a bus stop is located within the geographic scope of a capital improvement (ex, a bus stop on a street), ensure that the bus stop will be ADA-compliant (add concrete pad) and the stop will not be blocked

by on-street parking ("no parking, bus stop" markings) and that any bike lanes in the area are appropriately marked by broken lines & other MUTCD-compliant symbols as necessary.

(5) Check for bike facilities

- Transitions- at intersections, not mid-block
  - If Bike lane to no-bikelane: signage per MUTCD (bike lane ends, share the road signage, sharrow), & ensure there is a receiving xwalk ramp nearby
  - If No-bikelane to bikelane: signage per MUTCD (bike lane pavement markings, bike lane begins signage; placement at intersections, not mid-block)
- Lanes of travel
  - Bike lanes
    - Required on:
      - Major Streets: all.
      - **No existing bike lanes. Insufficient road/ROW width for new bike lanes on proposed roadway.**
      - Local Streets: where ADT ≥ 10,000
    - 4' wide minimum, exclusive of gutter pan
    - Wider by 1', max of 10', for
      - each 5 mph above a 25mph speed limit (ex: 35mph = 6', exclusive of gutter pan) OR
      - for each 5,000 by which ADT exceeds 10,000,
    - Pavement markings (bike lane decal) every block, in addition to 6" lane marking
  - Sharrows & other signage
    - Major Streets: Required wherever the ROW is too narrow for bike lanes (ex, Michigan Ave downtown) – "bikes may use full lane," etc
    - Local streets: at "entrances" to neighborhoods (ex. Perry Street south of Harriet; First south of Harriet; Mansfield north of Washtenaw)- where traffic would be turning/transitioning from a Major Street to a Local Street.
      - **Proposed sharrows**
- Parking
  - Major Streets: ROW parking for bicycles recommended in commercial/mixed-use areas where on-street car parking is provided (ex: downtown, depot town)
    - Placed on-street (seasonal racks) or in sidewalk buffer area
    - If overnight or long-term car facilities are in place, then also place overnight/long-term bike facilities.

(6) Check for pedestrian facilities

- Crosswalks
  - ADA compliant- all corners
    - **All four quadrants at Adams and Harriet. New cross walk installed at Adams and Harriet**
  - Striping/marking
    - Major Streets: Longitudinal ("piano keys")
      - If crosswalk is less than 6' wide, enclose longitudinal with transverse for visibility
    - Local Streets: longitudinal preferred, transverse permitted

        - If alternate paving materials or texturizing is used on crosswalks- ex, stamped concrete- enclose with transverse markings for visibility.
    - Lighting: required on all Major Streets; recommended on Local Streets
    - Bumpouts on all Major Streets where on-street parking is provided
        - **Crossing markings currently set up as longitudinal at the signalized and stop controlled intersections. Continental markings will be installed at mid-block crossings.**
        - **No bump outs proposed.**
- Sidewalks
    - **All sidewalks are to remain as-is. Trip hazard slabs will be replaced.**
    - ADA compliant- grading, width, materials
    - Major Streets in commercial/mixed-use:
        - aim for 10’ wide, 6’ min
        - 5’ buffer between sidewalk and street
        - Lighted
    - Major Streets in residential-only:
        - 5’-10’ wide (context-sensitive)
        - 10’-6’ buffer
        - Lighted
    - Local Streets:
        - min of 5’ wide
        - min 6’ buffer.

HARRIET STREET

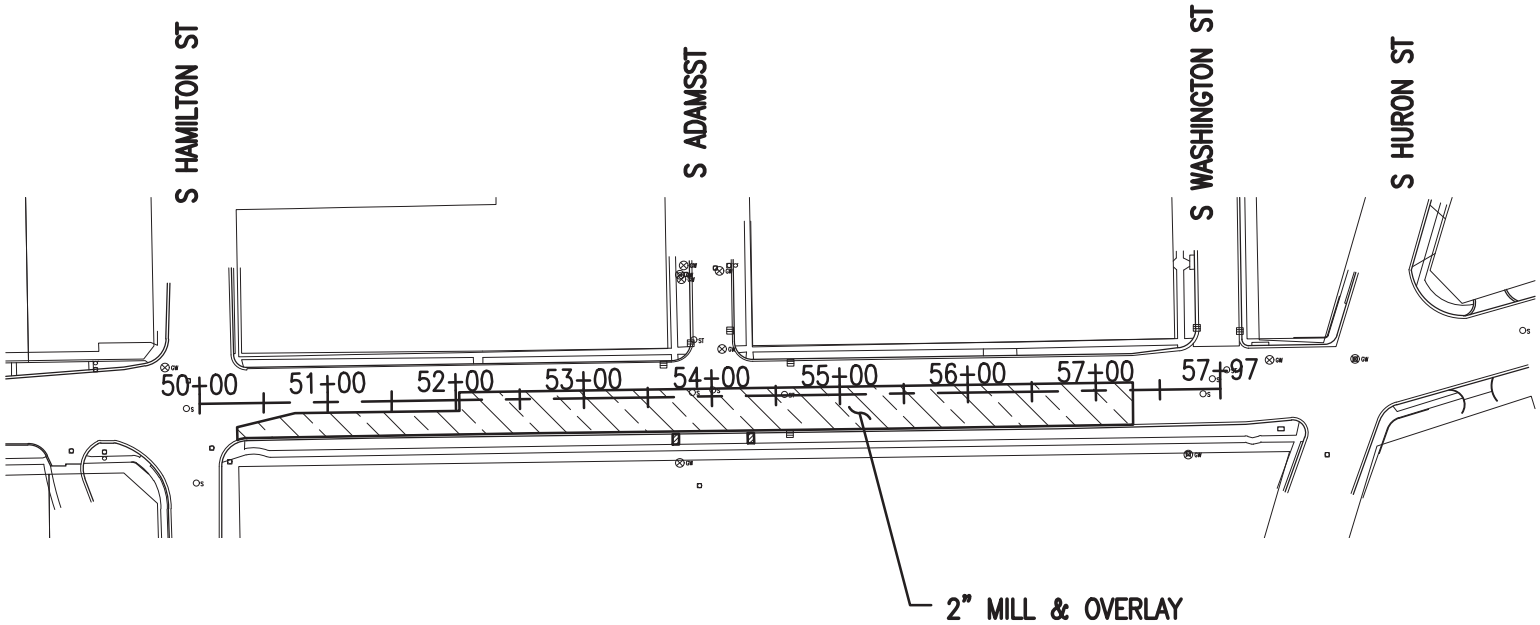

Know what's **below.**
Call before you dig.

2019 ROAD REPAIRS
HARRIET STREET

SCALE
H: 1"150' V: N/A

SHEET
5
OF 20

CLIENT:
CITY OF YPSILANTI

JOB #
0094-18-0020

34000 Plymouth Road | Livonia, MI 48150 | P (734) 522-6711 | F (734) 522-6427 | WWW.OHM-ADVISORS.COM

COPYRIGHT 2017 OHM ALL DRAWINGS AND WRITTEN MATERIALS APPEARING HEREIN CONSTITUTE THE ORIGINAL AND UNPUBLISHED WORK OF OHM AND THE SAME MAY NOT BE DUPLICATED, DISTRIBUTED, OR DISCLOSED WITHOUT PRIOR WRITTEN CONSENT OF OHM

DRAWING PATH: P:\0000_0100\0094180020_2019_FAC\Drawings\Civil\Plans_Const\180020CON.dwg Dec 07, 2018 – 8:57am

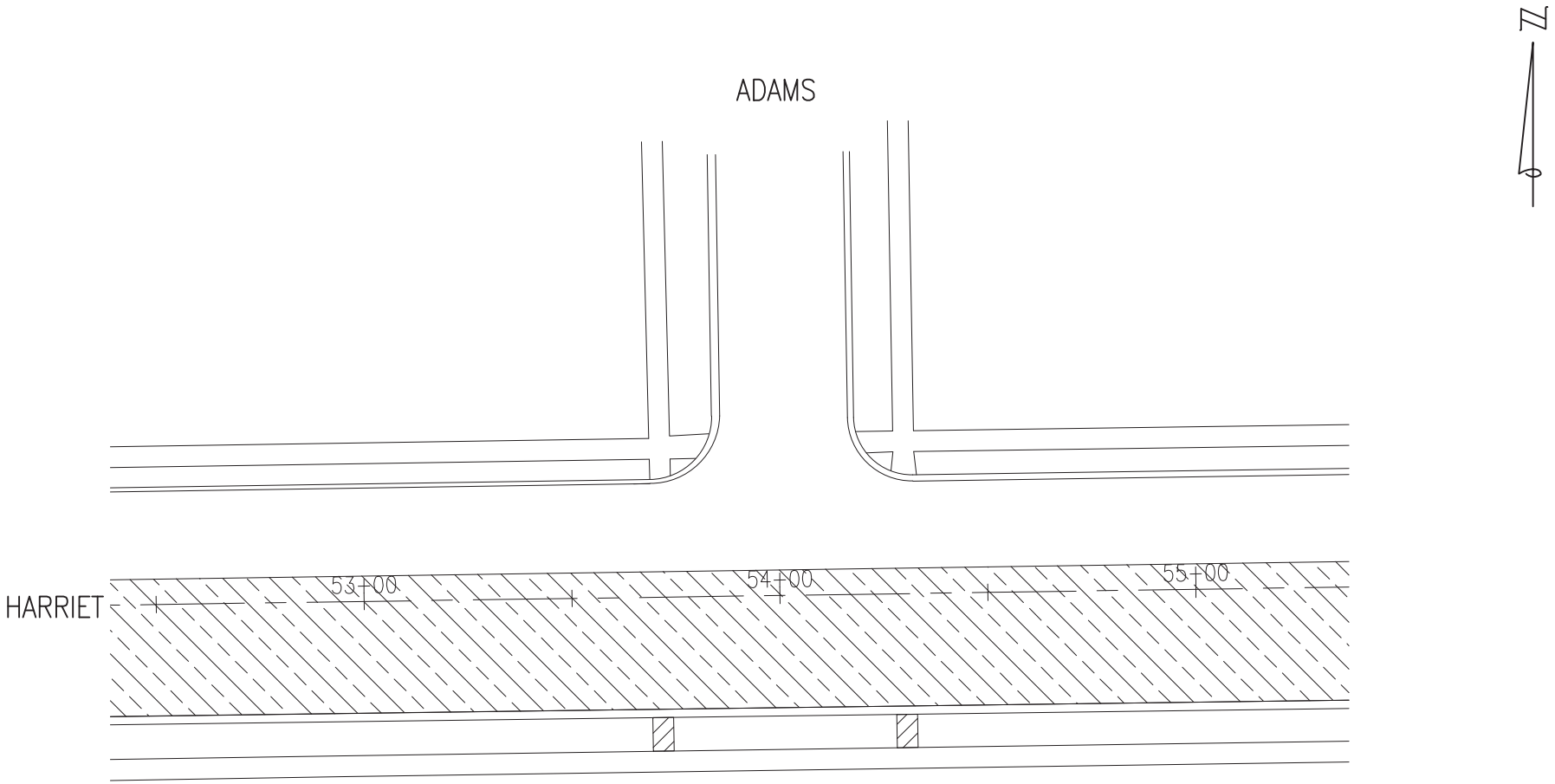

LEGEND

PROP WALK

MILL & OVERLAY

PROP CURB

LOCATION OF DETAIL:
NE, SE, NW, & SW CORNERS
HARRIET & ADAMS

2019 ROAD REPAIRS
PROPOSED CROSSWALK LAYOUT

SCALE
H: NTS V: NTS

SHEET
8
OF 20

CLIENT:
CITY OF YPSILANTI

JOB #
0094-18-0020

34000 Plymouth Road | Livonia, MI 48150 | P (734) 522-6711 | F (734) 522-6427 | WWW.OHM-ADVISORS.COM

COPYRIGHT 2017 OHM ALL DRAWINGS AND WRITTEN MATERIALS APPEARING HEREIN CONSTITUTE THE ORIGINAL AND UNPUBLISHED WORK OF OHM AND THE SAME MAY NOT BE DUPLICATED, DISTRIBUTED, OR DISCLOSED WITHOUT PRIOR WRITTEN CONSENT OF OHM

DRAWING PATH: P:\0000_0100\0094180020_2019_FAC\Drawings\Civil\Details\180020DET_02.dwg Dec 07, 2018 – 8:58am

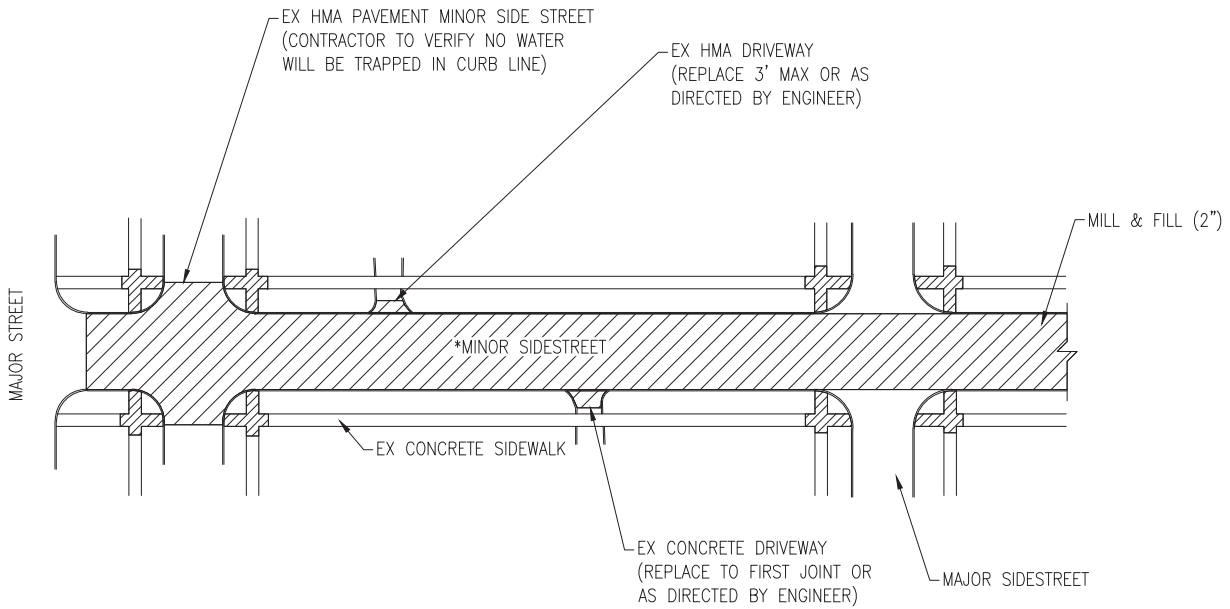

NOTE:
(*) AS SPECIFIED IN LOG OF PROJECT

THE LIMITS OF WORK AS SHOWN ARE FOR INFORMATION PURPOSES ONLY.

THE EXACT LIMITS ARE TO BE DETERMINED BY THE ENGINEER PRIOR TO THE MILLING OR PAVEMENT REMOVAL OPERATION.

AT MAJOR ROAD INTERSECTIONS, THE WORK SHALL STOP PRIOR TO THE MAJOR INTERSECTION RADIUS, UNLESS OTHERWISE DIRECTED BY THE ENGINEER. SUMMIT @ MICHIGAN AND CONGRESS @ MICHIGAN WILL HAVE THE LIMITS EXTENDED TO EDGE OF MAJOR.

REFER TO MDOT STANDARD PLAN R-28 SERIES FOR SIDEWALK RAMP DETAILS.

ONLY DRIVEWAYS SPECIFIED BY THE ENGINEER SHALL BE REPLACED.

PAVEMENT WORK AREA LIMITS

2019 ROAD REPAIRS
WORK LIMITS FOR RESIDENTIAL STREETS AND DRIVEWAY APPROACHES

SCALE
H: NTS V: NTS

SHEET
3

CLIENT:
CITY OF YPSILANTI

JOB #
0094-18-0020

34000 Plymouth Road | Livonia, MI 48150 | P (734) 522-6711 | F (734) 522-6427 | WWW.OHM-ADVISORS.COM

COPYRIGHT 2017 OHM ALL DRAWINGS AND WRITTEN MATERIALS APPEARING HEREIN CONSTITUTE THE ORIGINAL AND UNPUBLISHED WORK OF OHM AND THE SAME MAY NOT BE DUPLICATED, DISTRIBUTED, OR DISCLOSED WITHOUT PRIOR WRITTEN CONSENT OF OHM

DRAWING PATH: P:\0000_0100\0094180020_2019_FAC\Drawings\Civil\Details\180020DET.dwg Dec 07, 2018 – 8:57am

CONGRESS STREET

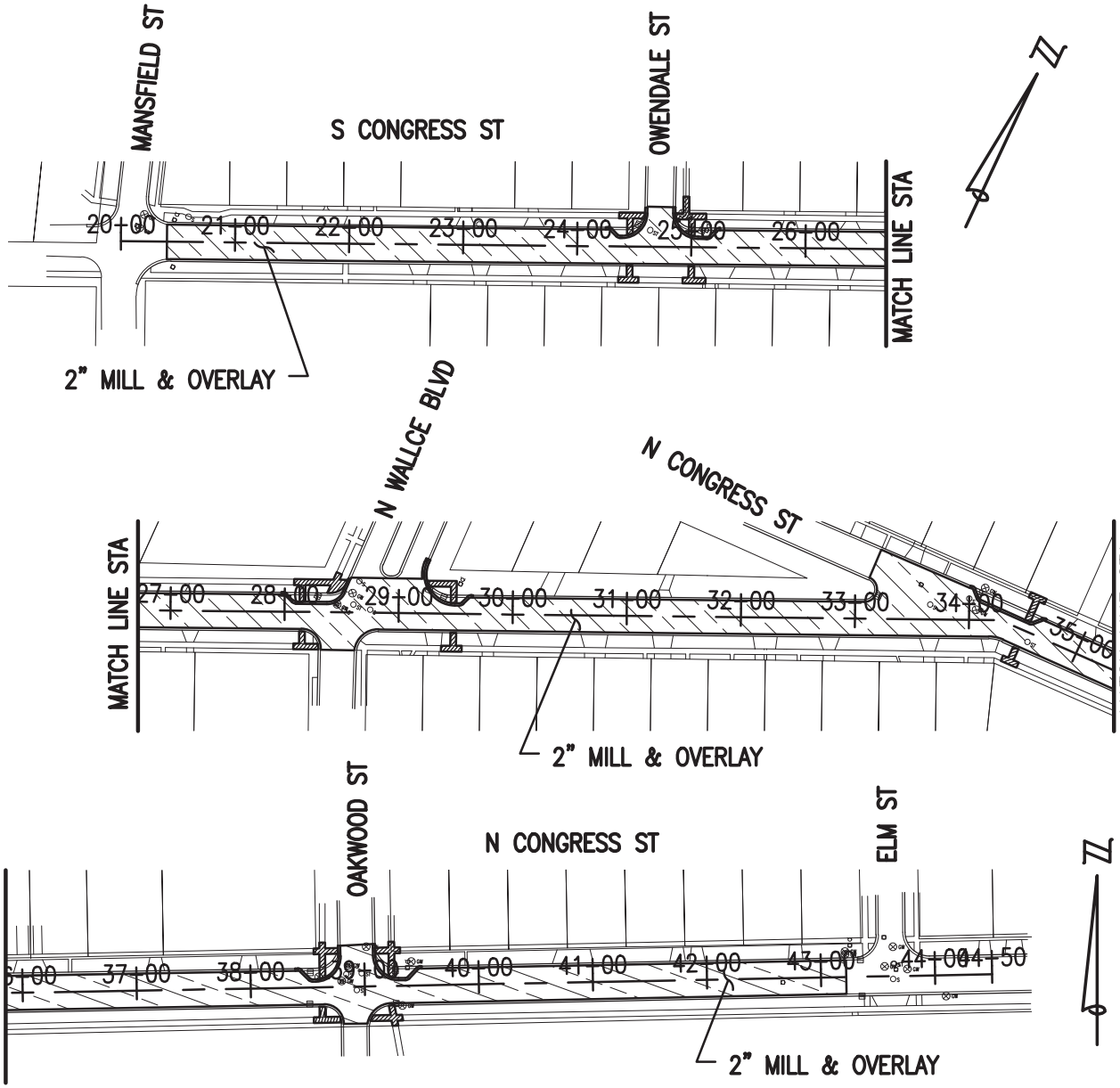

Know what's **below.**
Call before you dig.

2019 ROAD REPAIRS
S. CONGRESS STREET
POB STA 20+40 TO POE STA 43+22

SCALE
H: 1"=150' V: N/A

SHEET
4
OF 20

CLIENT:
CITY OF YPSILANTI

JOB #
0094-18-0020

34000 Plymouth Road | Livonia, MI 48150 | P (734) 522-6711 | F (734) 522-6427 | WWW.OHM-ADVISORS.COM

COPYRIGHT 2017 OHM ALL DRAWINGS AND WRITTEN MATERIALS APPEARING HEREIN CONSTITUTE THE ORIGINAL AND UNPUBLISHED WORK OF OHM AND THE SAME MAY NOT BE DUPLICATED, DISTRIBUTED, OR DISCLOSED WITHOUT PRIOR WRITTEN CONSENT OF OHM

DRAWING PATH: P:\0000_0100\0094180020_2019_FAC\Drawings\Civil\Plans_Const\180020CON.dwg Dec 07, 2018 – 8:57am

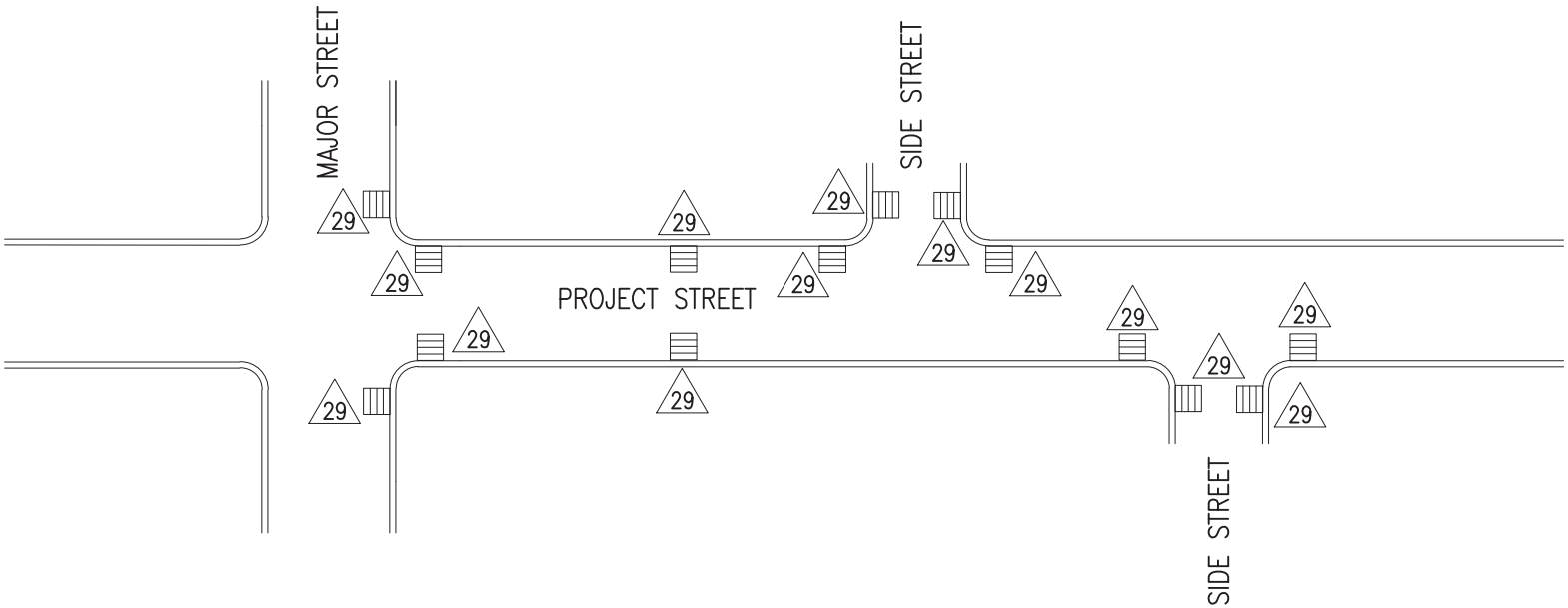

MDOT KEY #	TEMPORARY SESC ITEM DESCRIPTION	UNIT
29	Erosion Control, Inlet Protection, Fabric Drop	Ea

PLACE EROSION CONTROL, INLET PROTECTION, FABRIC DROP AND EROSION CONTROL, INLET PROTECTION, GEOTEXTILE AND STONE ON ALL CATCH BASIN INLETS AS SHOWN. THIS INCLUDES ALL INLETS ON THE PROJECT STREET AS WELL AS ANY INLETS IN SIDESTREET APPROACHES.

EXISTING OR PROPOSED SQUARE CATCH BASIN

2019 ROAD REPAIRS
WORK LIMITS FOR RESIDENTIAL STREETS AND DRIVEWAY APPROACHES

SCALE
H: NTS V: NTS

SHEET
12

CLIENT:
CITY OF YPSILANTI

JOB #
0094-18-0020

34000 Plymouth Road | Livonia, MI 48150 | P (734) 522-6711 | F (734) 522-6427 | WWW.OHM-ADVISORS.COM

COPYRIGHT 2017 OHM ALL DRAWINGS AND WRITTEN MATERIALS APPEARING HEREIN CONSTITUTE THE ORIGINAL AND UNPUBLISHED WORK OF OHM AND THE SAME MAY NOT BE DUPLICATED, DISTRIBUTED, OR DISCLOSED WITHOUT PRIOR WRITTEN CONSENT OF OHM

DRAWING PATH: P:\0000_0100\0094180020_2019_FAC\Drawings\Civil\Details\180020DET.dwg Dec 07, 2018 – 8:58am

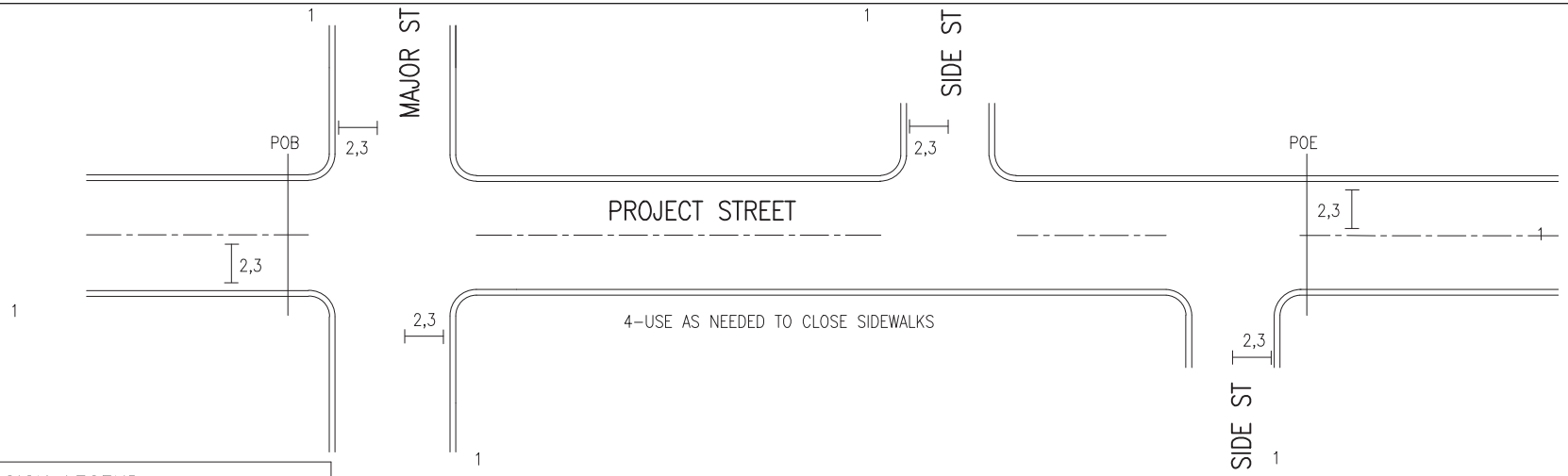

SIGN LEGEND

I.D. NUMBER	SIGN	SIGN DESIGNATION	SIZE	NUMBER REQUIRED
1	ROAD CLOSED AHEAD	W20-3	48x48	6
2		TYPE III BARRICADE	5'x4' (MIN.)	5
3	ROAD CLOSED TO THRU TRAFFIC	R11-4	60x30	5
4	SIDEWALK CLOSED	R9-9	24x12	5
5		W4-2	4x4	4
6	RIGHT LANE CLOSED AHEAD	W20-5R	4x4	4

2019 ROAD REPAIRS
TRAFFIC CONTROL

SCALE
H: NTS V: NTS

SHEET
13
OF 20

CLIENT:
CITY OF YPSILANTI

JOB #
0094-18-0020

34000 Plymouth Road | Livonia, MI 48150 | P (734) 522-6711 | F (734) 522-6427 | WWW.OHM-ADVISORS.COM

COPYRIGHT 2017 OHM ALL DRAWINGS AND WRITTEN MATERIALS APPEARING HEREIN CONSTITUTE THE ORIGINAL AND UNPUBLISHED WORK OF OHM AND THE SAME MAY NOT BE DUPLICATED, DISTRIBUTED, OR DISCLOSED WITHOUT PRIOR WRITTEN CONSENT OF OHM

DRAWING PATH: P:\0000_0100\0094180020_2019_FAC\Drawings\Civil\PMS\180020PMS.dwg Dec 07, 2018 - 8:58am

SIGN LEGEND

I.D. NUMBER	SIGN	SIGN DESIGNATION	NUMBER REQUIRED	LOCATION – HURON	LOCATION – HARRIET	LOCATION – CONGRESS
①	STOP	R1–1 (30"x30") 6.25 Sft TYPE III A 3 lb POST, 14 Ft	–			1–STA 20+50 (L) 1–STA 33+00 (R) 1–STA 25+50 (L) 1–STA 34+60 (L) 1–STA 28+20 (R) 1–STA 37+25 (L)
②	ONE WAY	R6–1R(12"x36") 3.0 Sft TYPE III B 3 lb POST, 14 Ft	–	1–STA 11+80 2–STA 12+10		
③	ALL WAY	R1–3P (6"x18") 0.75 Sft TYPE III A	–			1–STA 20+50 (L) 1–STA 33+00 (R) 1–STA 25+50 (L) 1–STA 34+60 (L) 1–STA 28+20 (R) 1–STA 37+25 (L)
④	SPEED LIMIT 25	R2–1 (24"x30") 5.0 Sft TYPE III B 3 lb POST, 14 Ft	–			1–STA 21+00 (R) 1–STA 24+40 (L) 1–STA 41+50 (L)
⑤	NO PARKING	R8–3a (12"x12") 1.0 Sft TYPE III A 3 lb POST, 14 Ft	–	1–STA 10+25 (R) 1–STA 10+25 (L)		
⑥		R7–201P (6"x12") 0.5 Sft TYPE III A	1	1–STA 10+25 (R) 1–STA 10+25 (L)		
⑦		W11–2 (30"x30") 6.25 Sft TYPE III B 1–3# STEEL POST (16 Ft)	–	1–STA 3+20 (L) 1–STA 9+60 (L)	1–STA 53+60 (L) 1–STA 54+40 (R)	1–STA 24+50 (R) 1–STA 25+00 (L)
⑧						
⑨	SPEED LIMIT 30	R2–1 (24"x30") 5.0 Sft TYPE III B 3 lb POST, 14 Ft			1–STA 1+50	
⑩	⊥	SIGN, TYPE III, ERECT, SALV	–	2–STA 3+20 (R)	2–STA 53+75	2–STA 21+00 (R)
⑪	1 BIKE ROUTE	D11–1 (24"x18") 6.25 Sft, TYPE IIIB 3 lb, 14 Ft	–			
POST A		1–#3 POST (14 Ft)	–	140	56	198
	OWENDALE	D3–1 (8") (24"x8")				2–STA 25+50 (L)
	CONGRESS	D3–1 (8") (24"x8")				
		W16–7PL (24"x12") ___ Sft, TYPE IIIB			1–STA 53+60 (R) 1–STA 54+40 (L)	1–STA 25+00 (R) 1–STA 25+00 (L)
		W16–7PR (24"x12") ___ Sft, TYPE IIIB			1–STA 53+60 (R) 1–STA 54+40 (L)	1–STA 25+00 (R) 1–STA 25+00 (L)

2019 ROAD REPAIRS
TRAFFIC SIGNS

SCALE
H: NTS V: NTS

SHEET
14
OF 20

CLIENT:
CITY OF YPSILANTI

JOB #
0094-18-0020

34000 Plymouth Road | Livonia, MI 48150 | P (734) 522-6711 | F (734) 522-6427 | WWW.OHM-ADVISORS.COM

COPYRIGHT 2017 OHM ALL DRAWINGS AND WRITTEN MATERIALS APPEARING HEREIN CONSTITUTE THE ORIGINAL AND UNPUBLISHED WORK OF OHM AND THE SAME MAY NOT BE DUPLICATED, DISTRIBUTED, OR DISCLOSED WITHOUT PRIOR WRITTEN CONSENT OF OHM

DRAWING PATH: P:\0000_0100\0094180020_2019_FAC\Drawings\Civil\PMS\180020PMS.dwg Dec 07, 2018 – 8:58am

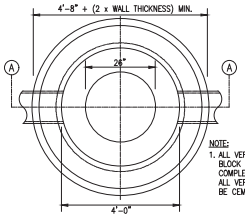

NOTE:
1. ALL VERTICAL HOLES IN CONCRETE BLOCK STRUCTURE WALL SHALL BE COMPLETELY FILLED WITH MORTAR. ALL VERTICAL WALL JOINTS SHALL BE CEMENT POINTED.

PLAN VIEW

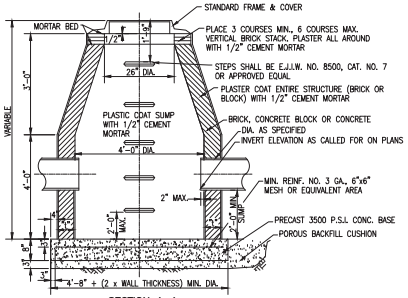

SECTION A–A
CATCH BASIN "A"

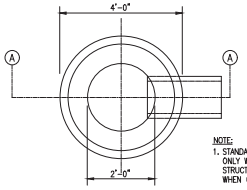

NOTE:
1. STANDARD INLET WILL BE USED ONLY WHEN OUTLETTING TO A STRUCTURE HAVING A SUMP OR WHEN OUTLETTING TO A DITCH

PLAN VIEW

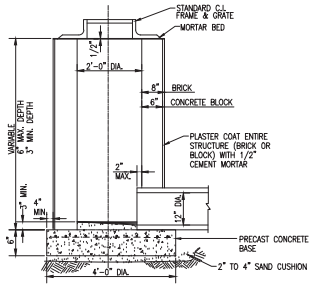

SECTION A–A
STANDARD INLET

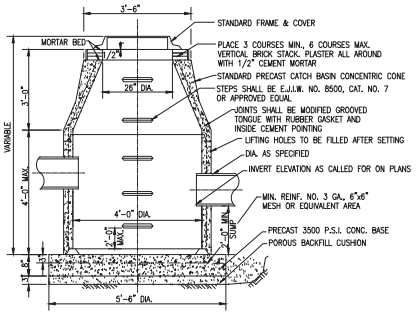

CROSS–SECTION
CATCH BASIN "B"

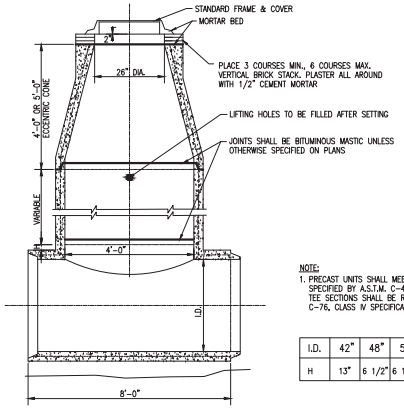

NOTE:
1. PRECAST UNITS SHALL MEET THE REQUIREMENTS SPECIFIED BY A.S.T.M. C-478-68. ALL MANHOLE TEE SECTIONS SHALL BE REINFORCED TO A.S.T.M. C-76, CLASS IV SPECIFICATIONS

H DIMENSION

I.D.	42"	48"	54"	60"	66"	72"	78"	84"	OVER 84"
H	13"	6 1/2"	6 1/2"	1"	1 3/4"	2 1/2"	4"	6"	7"

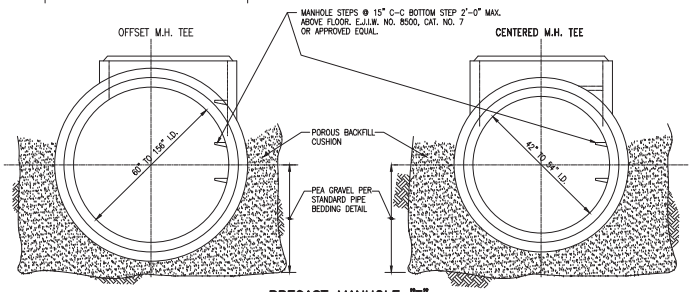

PRECAST MANHOLE "T"

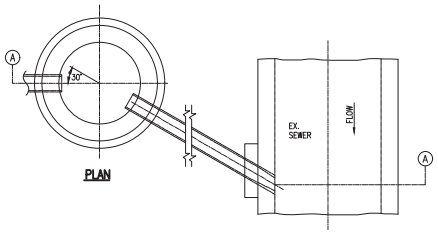

PLAN

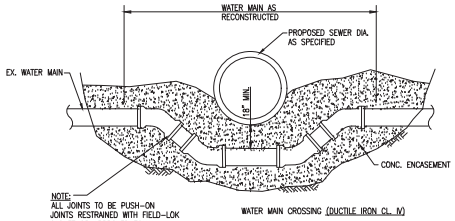

NOTE:
ALL JOINTS TO BE PUSH-ON JOINTS RESTRAINED WITH FIELD-LOK GASKET OR APPROVED EQUAL

WATER MAIN CROSSING

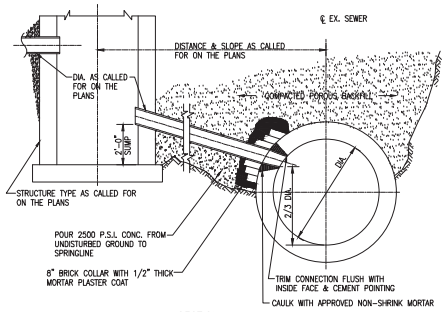

SECTION A–A
TYPICAL CONNECTIONS TO EXISTING SEWERS

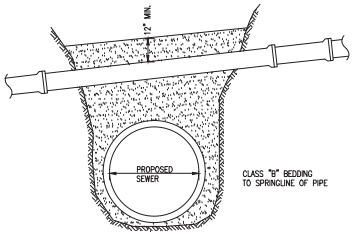

HOUSE CONNECTION CROSSING

NOTE:
1. M.D.O.T. GRANULAR MATERIAL CLASS II PLACED IN 6" LAYERS AND COMPACTED TO A MINIMUM OF 95% OF ITS MAXIMUM UNIT WEIGHT TO A HEIGHT OF 12" ABOVE THE TOP OF THE SEWER LEAD.

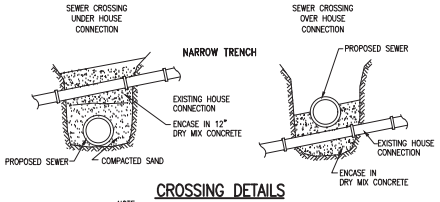

CROSSING DETAILS

NOTE:
1. WHEN UNSTABLE GROUND CONDITIONS ARE ENCOUNTERED STONE, SLAG OR DRY MIX CONCRETE SHALL BE USED TO BACKFILL THE TRENCH TO A HEIGHT 12" ABOVE THE TOP OF THE SEWER LEAD.

2019 ROAD REPAIRS
STANDARD DETAILS

SCALE
H: NTS V: NTS

SHEET
15
OF 20

CLIENT:
CITY OF YPSILANTI

JOB #
0094-18-0020

34000 Plymouth Road | Livonia, MI 48150 | P (734) 522-6711 | F (734) 522-6427 | WWW.OHM-ADVISORS.COM

COPYRIGHT 2017 OHM ALL DRAWINGS AND WRITTEN MATERIALS APPEARING HEREIN CONSTITUTE THE ORIGINAL AND UNPUBLISHED WORK OF OHM AND THE SAME MAY NOT BE DUPLICATED, DISTRIBUTED, OR DISCLOSED WITHOUT PRIOR WRITTEN CONSENT OF OHM

DRAWING PATH: P:\0000_0100\0094180020_2019_FAC\Drawings\Civil\Details\180020DET_STD.dwg Dec 07, 2018 – 8:58am

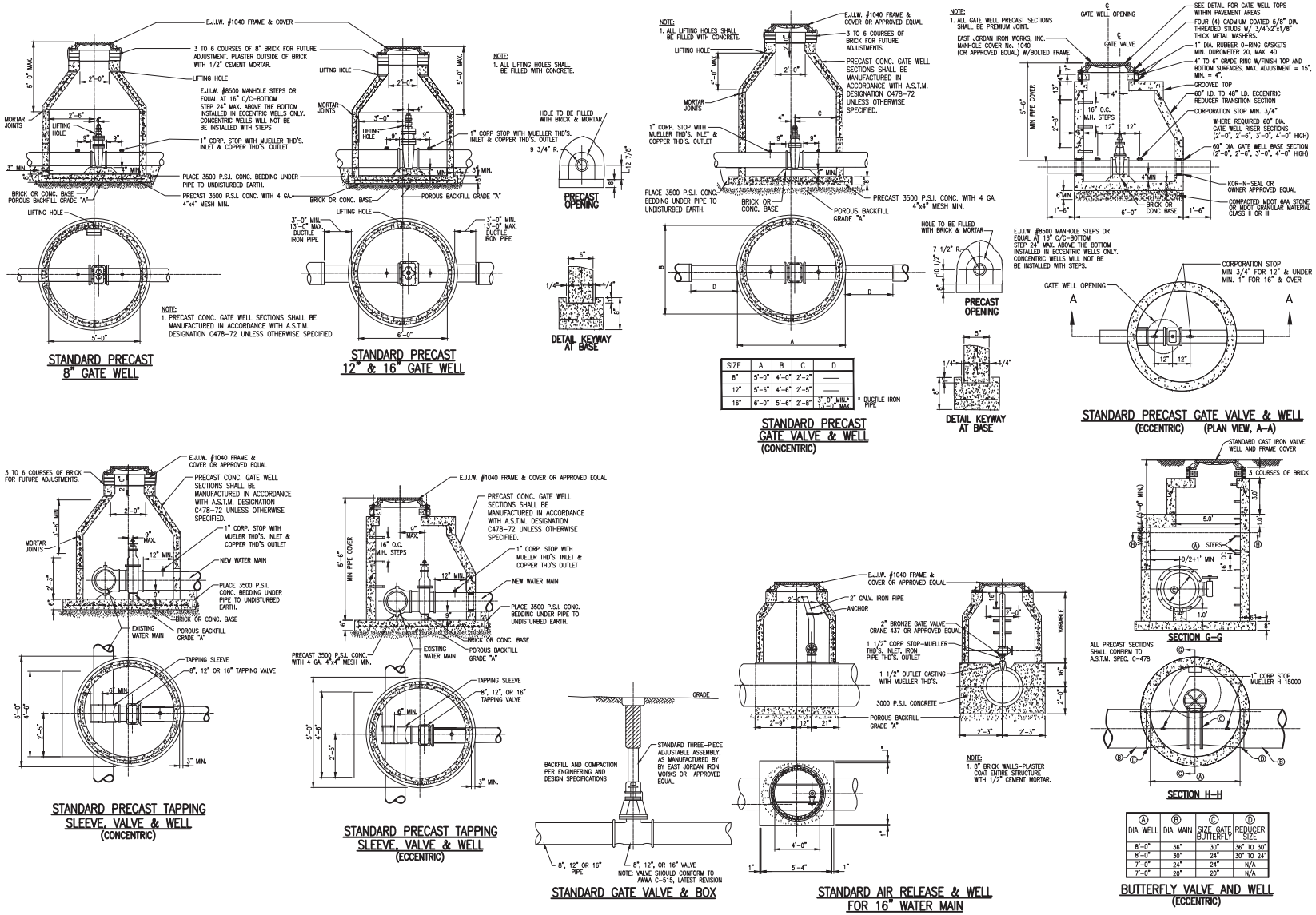

SIZE	A	B	C	D
8"	5'-0"	4'-0"	2'-2"	——
12"	5'-6"	4'-6"	2'-5"	——
16"	6'-0"	5'-6"	2'-8"	3'-0" MIN.* 13'-0" MAX.

Ⓐ DIA WELL	Ⓑ DIA MAIN	Ⓒ SIZE GATE BUTTERFLY	Ⓓ REDUCER SIZE
8'-0"	36"	30"	36" TO 30"
8'-0"	30"	24"	30" TO 24"
7'-0"	24"	24"	N/A
7'-0"	20"	20"	N/A

2019 ROAD REPAIRS
STANDARD DETAILS

SCALE
H: NTS V: NTS

SHEET
16
OF 20

CLIENT:
CITY OF YPSILANTI

JOB #
0094-18-0020

34000 Plymouth Road | Livonia, MI 48150 | P (734) 522-6711 | F (734) 522-6427 | WWW.OHM-ADVISORS.COM

COPYRIGHT 2017 OHM ALL DRAWINGS AND WRITTEN MATERIALS APPEARING HEREIN CONSTITUTE THE ORIGINAL AND UNPUBLISHED WORK OF OHM AND THE SAME MAY NOT BE DUPLICATED, DISTRIBUTED, OR DISCLOSED WITHOUT PRIOR WRITTEN CONSENT OF OHM

DRAWING PATH: P:\0000_0100\0094180020_2019_FAC\Drawings\Civil\Details\180020DET_STD.dwg Dec 07, 2018 - 8:58am

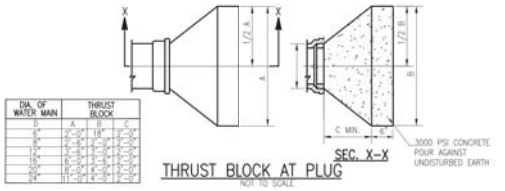

DIA. OF WATER MAIN	THRUST BLOCK A	B	C
6"	2'-0"	1'-0"	1'-0"
8"	2'-0"	1'-0"	1'-0"
12"	4'-0"	2'-0"	2'-0"
16"	6'-0"	3'-0"	3'-0"
20"	8'-0"	4'-0"	4'-0"
24"	11'-0"	4'-0"	5'-0"

THRUST BLOCK AT PLUG
NOT TO SCALE

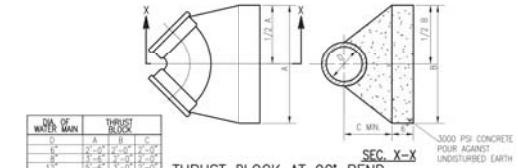

DIA. OF WATER MAIN	THRUST BLOCK A	B	C
6"	2'-0"	1'-0"	1'-0"
8"	3'-0"	1'-0"	1'-0"
12"	5'-0"	2'-0"	2'-0"
16"	6'-0"	3'-0"	3'-0"
20"	8'-0"	4'-0"	4'-0"
24"	9'-0"	4'-0"	5'-0"

THRUST BLOCK AT 90° BEND
NOT TO SCALE

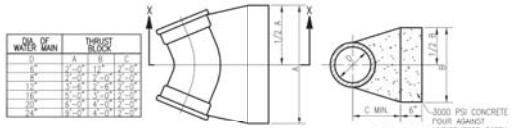

DIA. OF WATER MAIN	THRUST BLOCK A	B	C
6"	2'-0"	1'-0"	1'-0"
8"	3'-0"	1'-0"	1'-0"
12"	5'-0"	2'-0"	2'-0"
16"	6'-0"	3'-0"	3'-0"
20"	8'-0"	4'-0"	4'-0"
24"	10'-0"	4'-0"	5'-0"

THRUST BLOCK AT 45° BEND
NOT TO SCALE

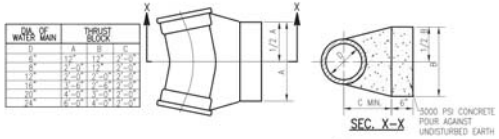

DIA. OF WATER MAIN	THRUST BLOCK A	B	C
6"	1'-6"	1'-0"	1'-0"
8"	2'-0"	1'-0"	1'-0"
12"	3'-0"	2'-0"	2'-0"
16"	4'-0"	2'-0"	2'-0"
20"	5'-0"	2'-0"	2'-0"
24"	6'-0"	2'-0"	2'-0"

THRUST BLOCK AT 22 1/2° BEND
NOT TO SCALE

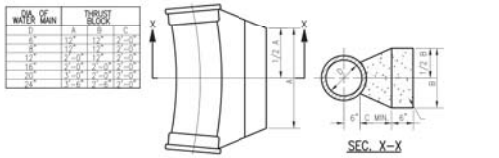

DIA. OF WATER MAIN	THRUST BLOCK A	B	C
6"	1'-0"	1'-0"	1'-0"
8"	1'-6"	1'-0"	1'-0"
12"	2'-0"	1'-0"	1'-0"
16"	2'-0"	1'-0"	1'-0"
20"	2'-0"	2'-0"	1'-0"
24"	3'-0"	2'-0"	1'-0"

THRUST BLOCK AT 11 1/4° BEND
NOT TO SCALE

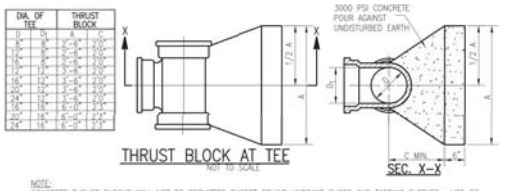

DIA. OF TEE	THRUST BLOCK A	B	C
6"	6"	1'-0"	1'-0"
8"	8"	1'-0"	1'-0"
12"	12"	1'-6"	1'-0"
16"	17"	2'-0"	1'-0"
20"	21"	2'-6"	1'-0"
24"	25"	3'-0"	1'-0"
30"	32"	3'-6"	2'-0"
36"	38"	4'-0"	2'-0"
42"	46"	4'-6"	2'-0"
48"	54"	5'-0"	2'-0"

THRUST BLOCK AT TEE
NOT TO SCALE

NOTE:
CONCRETE THRUST BLOCKS WILL NOT BE PERMITTED EXCEPT BEHIND HYDRANT SHOES AND TAPPING SLEEVES. USE OF CONCRETE THRUST BLOCKS IN OTHER LOCATIONS WILL NOT BE PERMITTED WITHOUT THE WRITTEN APPROVAL OF YCUA.

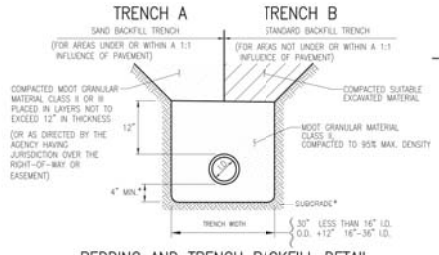

BEDDING AND TRENCH BACKFILL DETAIL FOR WATER MAIN
NOT TO SCALE

*NOTE: IF THE EXISTING SUBGRADE MATERIAL MEETS THE REQUIREMENTS FOR MDOT GRANULAR MATERIAL CLASS II (MINIMUM 4" THICK), THEN THE WATER MAIN MAY BE LAID DIRECTLY ON THE COMPACTED EXISTING SUBGRADE MATERIAL.

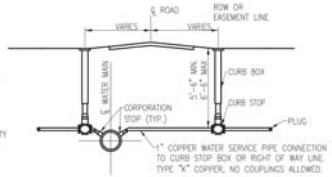

TYPICAL WATER SERVICE
NOT TO SCALE

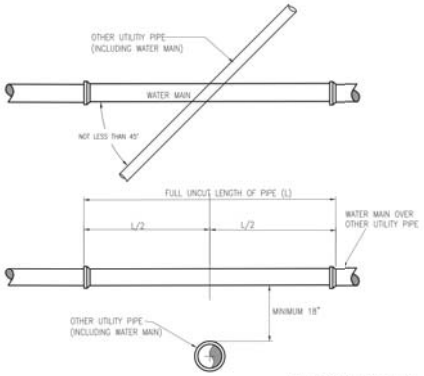

VERTICAL SEPARATION
NOTE: SEPARATION REQUIREMENTS APPLY REGARDLESS OF VERTICAL ALIGNMENTS OF UTILITIES

WATER MAIN CROSSING OTHER UTILITIES

HORIZONTAL SEPARATION
NOT TO SCALE

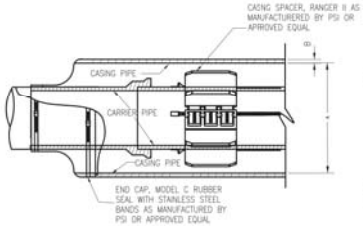

STANDARD CASING SECTION
NOT TO SCALE

NOTES:
1. NO WATER SHALL BE USED IN BORING UNDER RAILROADS.
2. MAINTAIN MIN. OF 5'-6" OF COVER BETWEEN BASE OF RAIL & TOP OF CASING.
3. THE ENDS OF THE CASING SHALL BE SUITABLY PRITECTED AGAINST THE ENTRANCE OF FOREIGN MATERIAL, BUT SHALL NOT BE TIGHTLY SEALED.
4. CASING SPACERS AND END SEALS SHALL BE INSTALLED IN ACCORDANCE WITH MANFACTURER'S RECOMMENDATIONS

DIA. OF WATER MAIN	MIN. O.D. A	ROAD CROSSING MIN. B	RAILROAD CROSSING MIN. B
6"	14"	0.250"	0.312"
8"	16"	0.250"	0.375"
12"	20"	0.250"	0.438"
16"	24"	0.250"	0.500"
20"	30"	0.312"	0.500"
24"	36"	0.375"	0.500"

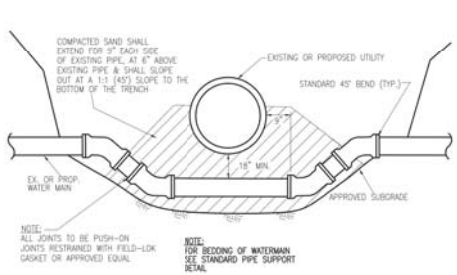

WATER MAIN LOWERING
NOT TO SCALE

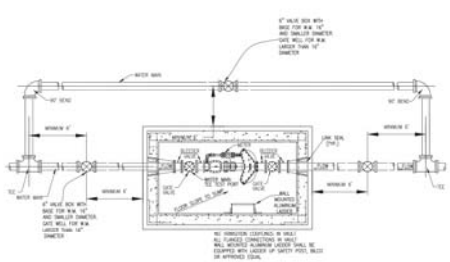

MASTER METER VAULT CONFIGURATION (WITHOUT COVER)
NOT TO SCALE

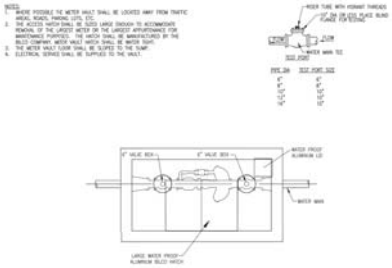

MASTER METER VAULT CONFIGURATION WITH COVER
NOT TO SCALE

2019 ROAD REPAIRS
STANDARD DETAILS

SCALE
H: NTS V: NTS

SHEET
17
OF 20

CLIENT:
CITY OF YPSILANTI

JOB #
0094-18-0020

34000 Plymouth Road | Livonia, MI 48150 | P (734) 522-6711 | F (734) 522-6427 | WWW.OHM-ADVISORS.COM

COPYRIGHT 2017 OHM ALL DRAWINGS AND WRITTEN MATERIALS APPEARING HEREIN CONSTITUTE THE ORIGINAL AND UNPUBLISHED WORK OF OHM AND THE SAME MAY NOT BE DUPLICATED, DISTRIBUTED, OR DISCLOSED WITHOUT PRIOR WRITTEN CONSENT OF OHM

DRAWING PATH: P:\0000_0100\0094180020_2019_FAC\Drawings\Civil\Details\180020DET_STD.dwg Dec 07, 2018 - 8:58am

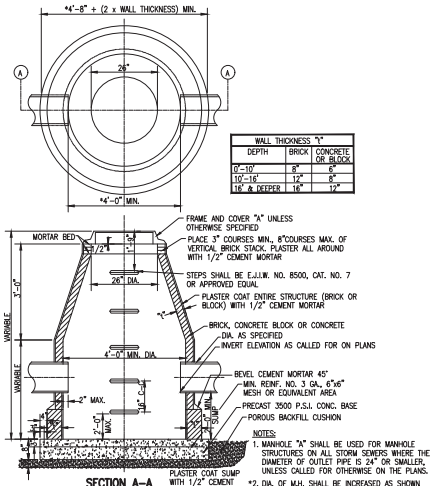

WALL THICKNESS "t"		
DEPTH	BRICK	CONCRETE OR BLOCK
0'-10'	8"	6"
10'-16'	12"	8"
16' & DEEPER	16"	12"

NOTES:
1. MANHOLE "A" SHALL BE USED FOR MANHOLE STRUCTURES ON ALL STORM SEWERS WHERE THE DIAMETER OF OUTLET PIPE IS 24" OR SMALLER, UNLESS CALLED FOR OTHERWISE ON THE PLANS.
*2. DIA. OF M.H. SHALL BE INCREASED AS SHOWN ON THE PLANS OR IN THE PROPOSAL DEPENDING ON THE DIAMETERS AND ANGLES OF THE SEWERS.

SECTION A–A
MANHOLE "A"

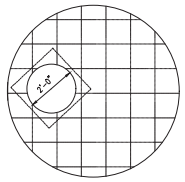

TOP SLAB

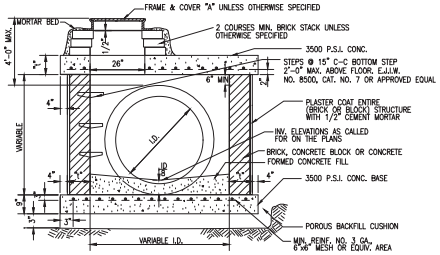

OUTLET I.D.	M.H. D	TOP SLAB "T"	WALLS "t"	REINFORCING STEEL (SLAB)
24" OR LESS	4'-0"	9"	8"	3/4" @ 9" EACH WAY
30"	*4'-0"	9"	8"	3/4" @ 9" EACH WAY
36"	*4'-0"	9"	12"	3/4" @ 9" EACH WAY
42"	*5'-0"	10"	12"	3/4" @ 9" EACH WAY
48" 54"	*6'-0"	11"	12"	7/8" @ 9" EACH WAY

M.H. D	TOP SLAB "T"	WALLS "t"	REINFORCING STEEL (SLAB)
7'-0"	12"	12"	7/8" @ 9" EACH WAY
8'-0"	12"	12"	1" @ 9" EACH WAY

NOTES:
*1. DIA. SHALL BE INCREASED AS SHOWN ON PLANS OR IN THE PROPOSAL DEPENDING ON THE ANGLE OF THE SEWERS.
2. MH. "D" SHALL BE USED WHERE THE DEPTH OF COVER FROM THE TOP OF CASTING TO THE TOP OF SEWER IS LESS THAN 4'-0". MH. "D" SHALL BE CONSTRUCTED WITH A 2' SUMP WHERE DIAMETER OF OUTLET SEWER IS 24" OR LESS.

TYPICAL SECTION
MANHOLE "D"

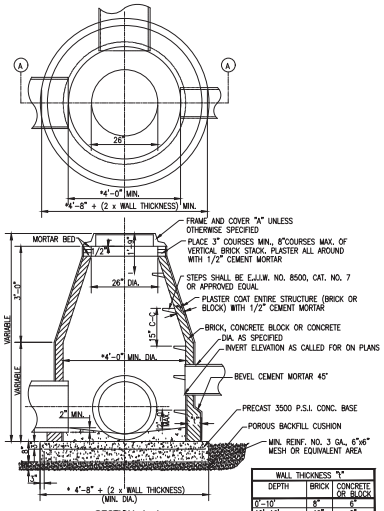

WALL THICKNESS "t"		
DEPTH	BRICK	CONCRETE OR BLOCK
0'-10'	8"	6"
10'-16'	12"	8"
16' & DEEPER	16"	12"

SECTION A–A
MANHOLE "B"

NOTES:
1. MANHOLE "B" SHALL BE USED FOR MANHOLE STRUCTURES ON ALL STORM SEWERS WHERE THE DIAMETER OF OUTLET PIPE IS 24" OR SMALLER, UNLESS CALLED FOR OTHERWISE ON THE PLANS.
*2. DIA. OF M.H. SHALL BE INCREASED AS SHOWN ON THE PLANS OR IN THE PROPOSAL DEPENDING ON THE DIAMETERS AND ANGLES OF THE SEWERS.

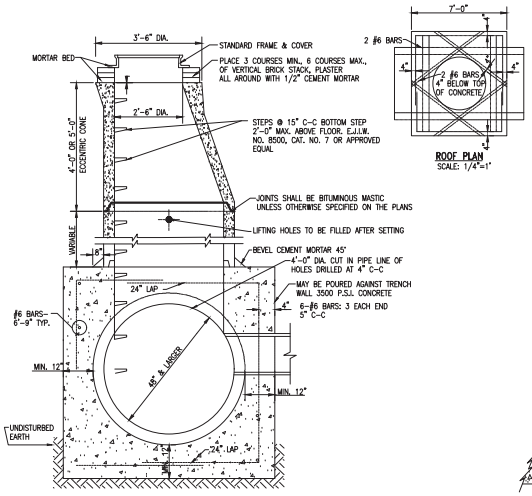

ROOF PLAN
SCALE: 1/4"=1'

TYPICAL SECTION
PRECAST MANHOLE "C"

NOTES:
1. MANHOLE "C" SHALL BE USED FOR MANHOLE STRUCTURES ON ALL STORM SEWERS WHERE 48" OR LARGER DIA. PIPES INTERSECT.
2. PRECAST UNITS SHALL MEET THE REQUIREMENTS SPECIFIED BY A.S.T.M. C-478-68.

GENERAL NOTES FOR
STORM SEWER MANHOLES

1. ALL MATERIALS AND WORKMANSHIP SHALL BE IN ACCORDANCE WITH THE CURRENT STANDARDS AND SPECIFICATIONS OF THE TOWNSHIP OF YPSILANTI AND YCUA.
2. CONTRACTOR SHALL CONSTRUCT MANHOLES WITH PRECAST REINFORCED CONCRETE UNITS ("E", "F", AND "J") IN LIEU OF CONCRETE, BRICK AND BLOCK MANHOLES ("A" AND "B") IN ACCORDANCE WITH THE FOLLOWING CONDITIONS:
   A. MAXIMUM DIAMETER OF SEWER OUTLET IN ANY PRECAST UNIT SHALL BE 18" (MANHOLE "E" ONLY).
   B. NO OPENINGS SHALL BE MADE IN PRECAST UNITS WHICH WOULD LEAVE LESS THAN 24" OF UNDISTURBED PRECAST PIPE OR WOULD REMOVE MORE THAN 30% OF THE CIRCUMFERENCE ALONG ANY HORIZONTAL PLANE.
   C. STRUCTURES FOR SEWERS LARGER THAN 18", OR THOSE NOT MEETING THE OPENING REQUIREMENTS, SHALL BE BUILT OF BLOCK OR BRICK UP TO A MINIMUM OF 8" ABOVE THE TOP OF SEWER, WITH PRECAST UNITS BEING USED ABOVE THIS POINT. WHERE PRECAST UNITS REST ON THE BLOCK OR BRICK, THE GROOVE IN THE PRECAST UNIT SHALL BE FILLED WITH MORTAR.
   D. OPENINGS FOR THE OUTLET SEWER SHALL BE PRECAST WITH A DIAMETER OF 3 INCHES LARGER THAN THE OUTSIDE DIAMETER OF THE OUTLET PIPE. ALL OTHER OPENINGS SHALL BE MADE IN THE FIELD AFTER MANHOLE HAS BEEN CONSTRUCTED.
3. ALL VERTICAL OPENINGS IN CONCRETE BLOCK STRUCTURE WALLS SHALL BE COMPLETELY FILLED WITH MORTAR. ALL VERTICAL WALL JOINTS SHALL BE CEMENT POINTED.
4. A "POURED 3500 P.S.I. CONCRETE BASE" WITHOUT STEEL REINFORCEMENT MAY BE SUBSTITUTED FOR PRECAST BASE WHEN APPROVED BY THE TOWNSHIP ENGINEER. A POROUS BACKFILL CUSHION WILL NOT BE REQUIRED UNDER THE POURED BASE UNLESS CONTRACTOR HAS EXCAVATED BELOW THE REQUIRED ELEVATION, AT WHICH TIME THE ENGINEER WILL DECIDE AS TO THE MERITS OF INCREASING THE THICKNESS OF THE CONCRETE BASE OR THE USE OF A POROUS BACKFILL CUSHION.
5. WHERE UNSTABLE GROUND CONDITIONS ARE ENCOUNTERED, SLAG OR STONE BEDDING SHALL BE USED AS DIRECTED BY THE ENGINEER IN ORDER TO PROVIDE A STABLE FOUNDATION FOR PIPE AND MANHOLES.
6. ALL PIPES ENTERING OR LEAVING A MANHOLE SHALL BE ADEQUATELY SUPPORTED BY POURING 2500 P.S.I. CONCRETE FILL FROM UNDISTURBED EARTH TO SPRINGLINE.
7. WHEREVER EXISTING MANHOLES OR SEWER PIPE ARE TO BE TAPPED, DRILL HOLES AT 4" CENTER TO CENTER AROUND PERIPHERY OR OPENING TO CREATE A PLANE OF WEAKNESS BEFORE BREAKING SECTION OUT.

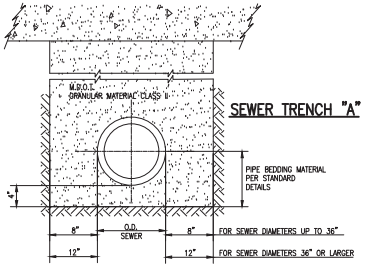

SEWER TRENCH "A"

NOTES:
1. TRENCH "A" SHALL BE USED UNDER ROAD SURFACES, PAVEMENT, SIDEWALK, CURB, AGGREGATE & PAVED DRIVES AND WHERE THE EDGE OF TRENCH IS WITHIN 3 FEET OF THE PAVEMENT
2. GRANULAR MATERIAL SHALL BE PLACED BY THE "CONTROLLED DENSITY METHOD" OR OTHER MEANS HAVING APPROVAL OF THE ENGINEER AND IS TO BE COMPACTED TO 95% OF MAXIMUM UNIT WEIGHT

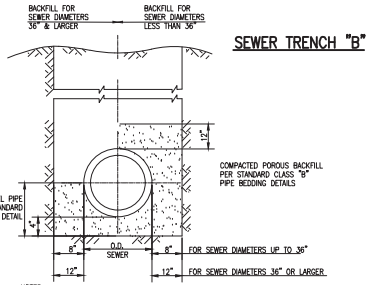

SEWER TRENCH "B"

NOTES:
1. SUITABLE EXCAVATED BACKFILL MATERIAL SHALL BE PLACED IN ONE FOOT LAYERS AND COMPACTED BY MECHANICAL TAMPING OR OTHER EFFECTIVE MEANS HAVING APPROVAL OF THE ENGINEER, TO A DENSITY EQUIVALENT TO THE UNDISTURBED ADJACENT SOIL
2. TRENCH "B" SHALL BE USED UNDER CONDITIONS OTHER THAN SPECIFIED FOR TRENCH "A"

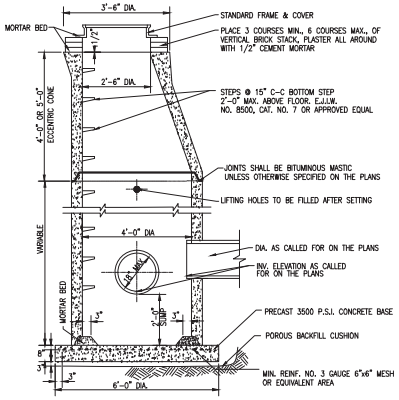

TYPICAL SECTION
PRECAST MANHOLE "E"

NOTES:
1. THIS MANHOLE SHALL BE USED ONLY WHEN MEETING CONDITIONS STATED IN THE "GENERAL MANHOLE NOTES", ITEM NO. 2A
2. PRECAST UNITS SHALL MEET THE REQUIREMENTS SPECIFIED BY A.S.T.M. C-478-68.

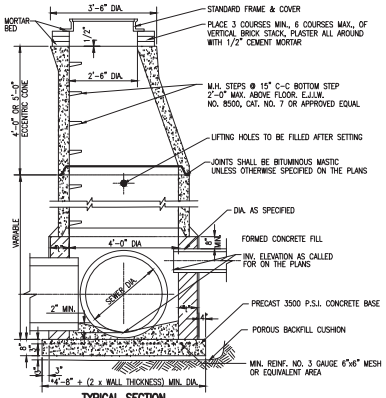

WALL THICKNESS "t"		
DEPTH	BRICK	CONCRETE OR BLOCK
0'-10'	8"	6"
10'-16'	12"	8"
16' & DEEPER	16"	12"

TYPICAL SECTION
PRECAST MANHOLE "F"

NOTES:
1. THIS MANHOLE SHALL BE USED ONLY WHEN MEETING CONDITIONS STATED IN THE "GENERAL MANHOLE NOTES", ITEM NO. 2A
2. PRECAST UNITS SHALL MEET REQUIREMENTS SPECIFIED BY A.S.T.M. C-478-68.
*3. DIAMETER OF MANHOLE SHALL BE INCREASED AS SHOWN ON PLANS OR IN THE PROPOSAL, DEPENDING ON THE DIAMETERS AND ANGLES OF THE SEWERS.

2019 ROAD REPAIRS
STANDARD DETAILS

SCALE
H: NTS V: NTS

SHEET
18
OF 20

CLIENT:
CITY OF YPSILANTI

JOB #
0094-18-0020

34000 Plymouth Road | Livonia, MI 48150 | P (734) 522-6711 | F (734) 522-6427 | WWW.OHM-ADVISORS.COM

COPYRIGHT 2017 OHM ALL DRAWINGS AND WRITTEN MATERIALS APPEARING HEREIN CONSTITUTE THE ORIGINAL AND UNPUBLISHED WORK OF OHM AND THE SAME MAY NOT BE DUPLICATED, DISTRIBUTED, OR DISCLOSED WITHOUT PRIOR WRITTEN CONSENT OF OHM

DRAWING PATH: P:\0000_0100\0094180020_2019_FAC\Drawings\Civil\Details\180020DET_STD.dwg Dec 07, 2018 – 8:59am

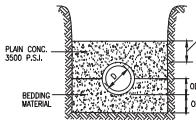

LOAD FACTORS
2.8 PLAIN CONC.
OD + 8" MIN.
11/4 OD

CLASS A

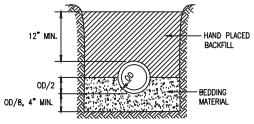

LOAD FACTOR
1.9

CLASS B

MAX. WIDTH OF TRENCH 12" ABOVE TOP OF PIPE
6" THRU 12" PIPE 30" WIDE
15" THRU 36" PIPE – OD+16"
42" THRU 60" PIPE – OD+20"
OVER 60" PIPE OUTSIDE DIA. OF PIPE+24"
MIN. WIDTH OF TRENCH 12" ABOVE THE TOP OF THE PIPE SHALL BE 6" ON EACH SIDE OF PIPE.

PIPE BEDDING DETAILS

DOG HOUSE CUT OUT SIZES	
SEWER SIZE	MAX. CUT OUT SIZE
8" THRU 10"	17 1/2"
12" THRU 15"	20"

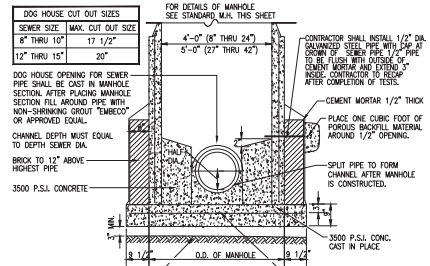

STANDARD SANITARY MANHOLE
ON EXISTING SEWERS 10" THRU 42"

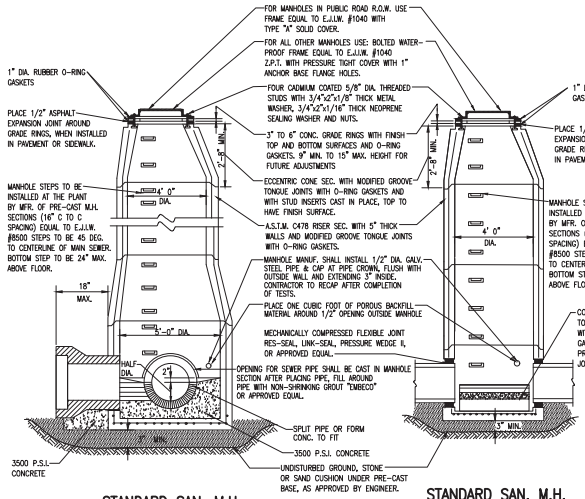

STANDARD SAN. M.H.
FOR SEWERS 27" THRU 42"

STANDARD SAN. M.H.
FOR SEWERS 10" THRU 24"

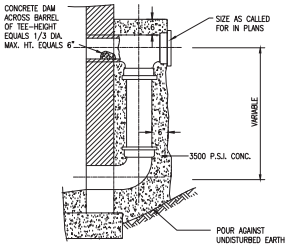

EXTERNAL DROP CONNECTION

DIA. OF SEWER	DIA. OF DROP CONNECTION
8" & 10"	8"
12",15" & 18"	12"
21",24" & 30"	18"
36" & 42"	24"

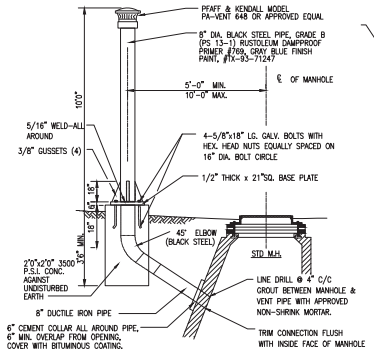

STANDARD VENT ASSEMBLY

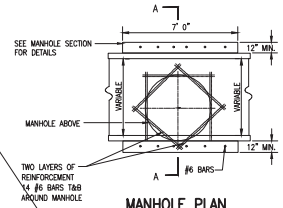

MANHOLE PLAN
48" & LARGER SEWERS

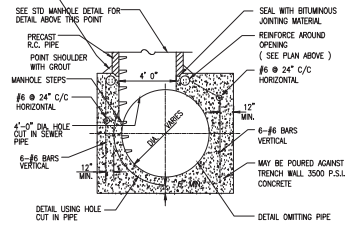

MANHOLE SECTION A-A
48" & LARGER SEWERS
SANITARY OR STORM

SANITARY SEWER NOTES

1. ALL MANHOLE RIMS SHALL BE SET TO GRADE AS FURNISHED BY THE ENGINEER.
2. RISERS ON SANITARY SEWERS SHALL BE INSTALLED WHERE SEWER IS OVER 8' DEEP TO A DEPTH OF 8'.
3. PLACE ONE 6" WYE FOR EACH LOT ON SANITARY SEWERS UNLESS OTHERWISE SPECIFIED.
4. ALL MANHOLES SHALL USE ECCENTRIC CONES PLACED TOWARD THE PROPERTY LINE UNLESS OTHERWISE NOTED.
5. INFILTRATION FOR ANY SECTION OF SEWERS BETWEEN MANHOLES SHALL NOT EXCEED 200 GALLONS PER INCH DIAMETER PER MILE OF SEWER PER 24 HRS.
6. NO FOOTING DRAINS SHALL BE CONNECTED TO THE BUILDING SEWER.
7. DIFFERENTIAL OF EXCAVATION AROUND EXISTING MANHOLES SHALL NOT EXCEED 6 FEET.
8. NO CONNECTION RECEIVING STORM WATER, SURFACE WATER, OF GROUND WATER SHALL BE MADE TO SANITARY SEWERS.
9. ALL SEWERS SHALL BE SUBJECT TO AIR INFILTRATION OR EXFILTRATION TESTS, OR A COMBINATION OF SAME, PRIOR TO ACCEPTANCE. ALL SEWERS OVER 24" DIAMETER SHALL BE SUBJECTED TO INFILTRATION TESTS. ALL SEWERS OF 24" DIAMETER OR SMALLER, WHERE THE GROUND WATER LEVEL ABOVE THE TOP OF THE SEWER IS OVER 7 FEET, SHALL BE SUBJECTED TO INFILTRATION TESTS. ALL SEWERS OF 24" DIAMETER OR LESS, WHERE THE GROUND WATER LEVEL ABOVE THE TOP OF THE SEWER IS 7 FEET OR LESS, SHALL BE SUBJECTED TO AIR TESTS OR EXFILTRATION TESTS.
10. ALL SEWER SYSTEM CONSTRUCTION SHALL CONFORM TO THE CURRENT STANDARDS AND GENERAL SPECIFICATIONS OF YPSILANTI TOWNSHIP, YCUA AND ANY OTHER AGENCY HAVING JURISDICTION OF THE CONSTRUCTION AREA.
11. ALL SEWERS SHALL BE TELEVISED, WITH TEST RESULTS APPROVED BY THE COUNTY AGENCY PRIOR TO PLACING THE SEWER IN SERVICE.
12. ALL STUBS SHALL HAVE A WATER AND AIR TIGHT BULKHEAD.
13. NO SEWER SHALL BE CONSTRUCTED LESS THAN 10" IN DIAMETER WITHOUT SPECIFIC WRITTEN APPROVAL OF THE TOWNSHIP.

MATERIALS

1. SANITARY FORCE MAIN
FORCE MAIN OUTSIDE THE WET WELL SHALL BE 2" POLYETHYLENE SDR 11.5 OR 2" PVC SDR 13.5 OR SCHEDULE 40. PIPE SHALL BE MANUFACTURED FROM VIRGIN MATERIALS AND BE SUITABLE FOR BURIED SANITARY SEWERAGE SERVICE. PIPE SHALL BE JOINED USING SOLVENT WELD COUPLINGS. INSTALLATION SHALL INCLUDE ALL FITTINGS AND APPURTENANCES TO CONNECT THE FORCE MAIN TO THE GRINDER PUMP SYSTEM AND TO ALLOW CONNECTION OF A CHECK VALVE AND GATE VALVE. UPON COMPLETION, THE FORCE MAIN SHALL BE TESTED AT A PRESSURE OF 50 PSI FOR 1 HOUR.
2. SANITARY SEWER
SANITARY SEWER SHALL BE COMPOSITE ABS OR PVC TRUSS PIPE CONFORMING TO REQUIREMENTS OF ASTM D-2680. OR, PVC PIPE CONFORMING TO ASTM D-3034 (SDR 26) MAY BE USED WHERE DEPTH IS LESS THAN 15'.

2019 ROAD REPAIRS
STANDARD DETAILS

SCALE
H: NTS V: NTS

SHEET
19
OF 20

CLIENT:
CITY OF YPSILANTI

JOB #
0094-18-0020

34000 Plymouth Road | Livonia, MI 48150 | P (734) 522-6711 | F (734) 522-6427 | WWW.OHM-ADVISORS.COM

COPYRIGHT 2017 OHM ALL DRAWINGS AND WRITTEN MATERIALS APPEARING HEREIN CONSTITUTE THE ORIGINAL AND UNPUBLISHED WORK OF OHM AND THE SAME MAY NOT BE DUPLICATED, DISTRIBUTED, OR DISCLOSED WITHOUT PRIOR WRITTEN CONSENT OF OHM

DRAWING PATH: P:\0000_0100\0094180020_2019_FAC\Drawings\Civil\Details\180020DET_STD.dwg Dec 07, 2018 – 8:59am

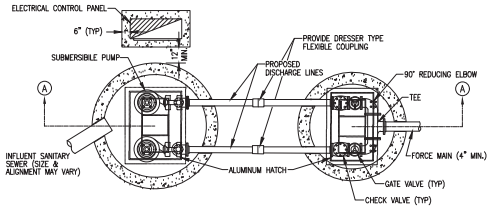

PLAN VIEW
PUMP STATION

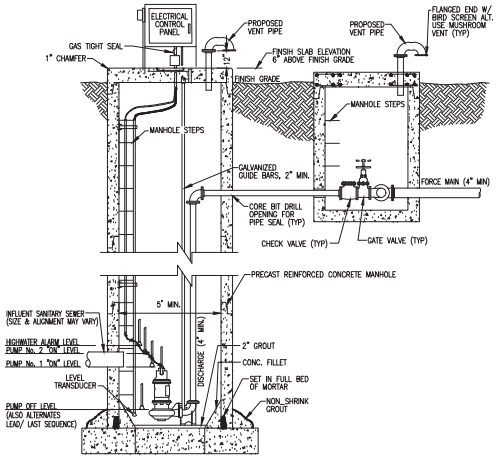

SECTION A–A
PUMP STATION

HOUSE CONNECTION CROSSING

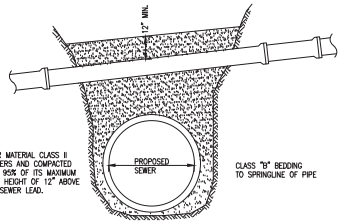

NOTES:
1. M.D.O.T. GRANULAR MATERIAL CLASS II PLACED IN 6" LAYERS AND COMPACTED TO A MINIMUM OF 95% OF ITS MAXIMUM UNIT WEIGHT TO A HEIGHT OF 12" ABOVE THE TOP OF THE SEWER LEAD.

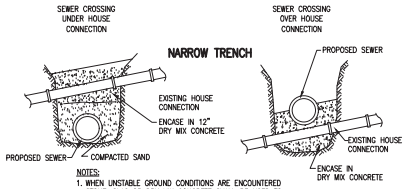

NOTES:
1. WHEN UNSTABLE GROUND CONDITIONS ARE ENCOUNTERED STONE, SLAG OR DRY MIX CONCRETE SHALL BE USED TO BACKFILL THE TRENCH TO A HEIGHT 12" ABOVE THE TOP OF THE SEWER LEAD.

CROSSING DETAILS

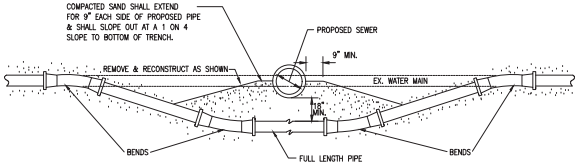

RELOCATION OF WATER MAIN
SANITARY OR STORM

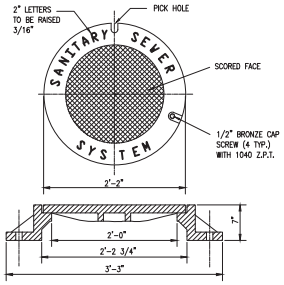

STANDARD FRAME & COVER
E.J.I.W. #1040 OR
1040 Z.P.T. AS REQ'D.

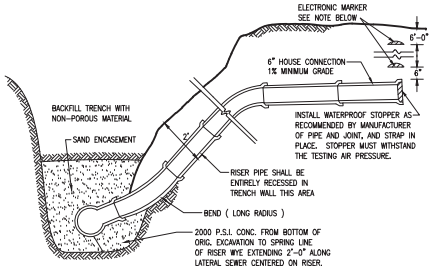

RISER DETAIL

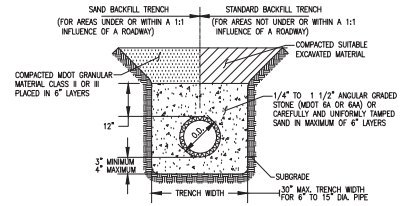

FLEXIBLE PIPE (10" OR 15" DIA ABS TRUSS OR PVC TRUSS)
STANDARD BEDDING AND TRENCH BACKFILL DETAIL

NOTES:
1. STONE MAY BE USED TO SPRINGLINE AND SAND ABOVE IF DESIRED

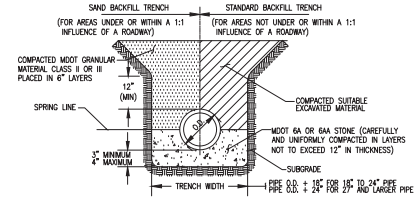

RIGID PIPE (18" DIAMETER AND LARGER CONCRETE)
STANDARD BEDDING AND TRENCH BACKFILL DETAIL

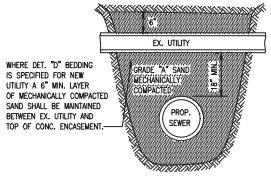

STANDARD PIPE SUPPORT
SANITARY OR STORM

NOTES:
1. COMPACTED SAND SHALL EXTEND FOR 9" EACH SIDE OF EX. PIPE AT 6" ABOVE EX. PIPE & SHALL SLOPE OUT AT A 1 ON 4 SLOPE TO BOTTOM OF TRENCH.

2019 ROAD REPAIRS
STANDARD DETAILS

SCALE
H: NTS V: NTS

SHEET
20
OF 20

CLIENT:
CITY OF YPSILANTI

JOB #
0094-18-0020

34000 Plymouth Road | Livonia, MI 48150 | P (734) 522-6711 | F (734) 522-6427 | WWW.OHM-ADVISORS.COM

COPYRIGHT 2017 OHM ALL DRAWINGS AND WRITTEN MATERIALS APPEARING HEREIN CONSTITUTE THE ORIGINAL AND UNPUBLISHED WORK OF OHM AND THE SAME MAY NOT BE DUPLICATED, DISTRIBUTED, OR DISCLOSED WITHOUT PRIOR WRITTEN CONSENT OF OHM

DRAWING PATH: P:\0000_0100\0094180020_2019_FAC\Drawings\Civil\Details\180020DET_STD.dwg Dec 07, 2018 – 8:59am

Bonnie Wessler

From: Jeff Murphy <JMurphy@theride.org>
Sent: Wednesday, December 19, 2018 2:26 PM
To: Bonnie Wessler
Subject: RE: 2019 roads projects

Hi Bonnie
The Ypsilanti Senior Citizens Center at 1015 N. Congress would be a great priority location. Bus stops are located on either side of Congress at Oakwood at the four way stop. A good design example of a bus stop at a stop sign is shown below. We coordinated this effort on Cross at Wallace with OHM last time around. We can also discuss any need for benches at these stops if the senior center is willing to Adopt-the stop(s).

Also the stop on Harriet at Hamilton is a good candidate, it has significant ridership with 10 daily riders.

Thanks Bonnie-Happy Holidays
Jeff

From: Bonnie Wessler <wesslerb@cityofypsilanti.com>
Sent: Wednesday, December 12, 2018 12:28 PM
To: Jeff Murphy <JMurphy@theride.org>

Subject: RE: 2019 roads projects

We love our transit in Ypsi, always happy to coordinate. :)
So we can prioritize a bit (I'm not 100% sure where we're at with budget)- which stops have the highest ridership &/or the most vulnerable user base?

--
Bonnie Wessler, AICP
City Planner
Community Development Division, City of Ypsilanti
734/483.9646 (office)
bwessler@cityofypsilanti.com

Sign up to receive City news and public notices here: http://cityofypsilanti.com/list.aspx
--

From: Jeff Murphy [mailto:JMurphy@theride.org]
Sent: Wednesday, December 12, 2018 9:19 AM
To: Bonnie Wessler <wesslerb@cityofypsilanti.com>
Subject: RE: 2019 roads projects

Please see attached Bonnie
Thanks
Jeff

From: Jeff Murphy
Sent: Wednesday, December 12, 2018 9:13 AM
To: 'Bonnie Wessler' <wesslerb@cityofypsilanti.com>
Subject: RE: 2019 roads projects

Hi Bonnie
Thanks for considering transit stops with this project. It looks like we have 7 bus stops in the project areas you mentioned. (most are on Congress) All of the stops are relatively low ridership therefore they don't currently meet the criteria to be on our project list. If Ypsilanti can include these stops in their project budget that would be great. In the past I believe you had us coordinate with OHM on bus stop design on Cross St. Depending on the existing topography some locations might be a challenge, the bus stop pads need to be at a 2% slope per the ADA.

Congress at Mansfield (2 stops, one on either side)
Congress at Wallace (2 stops, one on either side)
Congress at Oakwood (2 stops, one on either side)

South side of Harriet east of Hamilton # stop 2117

Thanks again Bonnie -Happy Holidays
Jeff

From: Bonnie Wessler <wesslerb@cityofypsilanti.com>
Sent: Tuesday, December 11, 2018 11:50 AM
To: Jeff Murphy JMurphy@theride.org.

Subject: 2019 roads projects

Hey Jeff-

We’re looking at our 2019 roads projects (huron between forest & cross, congress between Mansfield & elm, eastbound lanes of harriet between Washington & Hamilton), and it’s slated to go before planning commission this January. I’d love for you to take a look at the draft plans (attached) and let me know if you see an opportunity to improve stops/etc.
Thanks,
Bonnie

--
Bonnie Wessler, AICP
City Planner
Community Development Division, City of Ypsilanti
734/483.9646 (office)
bwessler@cityofypsilanti.com

Sign up to receive City news and public notices here: http://cityofypsilanti.com/list.aspx
--

City of Ypsilanti
Community & Economic Development Department

15 March 2018

Staff Review of Rezoning Application
Medical Marijuana Text Amendments
Provisioning Centers Buffer Increase

TABLED 03-2018

GENERAL INFORMATION

Applicant: City of Ypsilanti

Action Requested: Recommendation to City Council to approve a Text Amendment to Medical Marijuana Dispensaries (recommended to become "Medical Marijuana Provisioning Centers"), 122-532(b)(3)

SUMMARY

State regulations regarding medical marijuana facilities have recently changed to allow for more commercial operations. This amendment would limit the number of provisioning centers throughout the City by doubling the required buffer between provisioning centers from 500 feet to 1,000 feet.

BACKGROUND

In 2008, the voters of the State of Michigan approved a ballot initiative to legalize medical marijuana, using a caregiver, person-to-person model; Ypsilanti voters supported this ballot measure by over 80%. In 2011, the City of Ypsilanti adopted zoning regulations reflective of that, allowing groups of caregivers to grow under one roof in the M1, M2, WS, and CI zoning districts with a Special Use Permit; and caregivers to connect with patients at dispensaries in the B2, B3, and B4 zoning districts by right.

In 2014, the zoning ordinance shifted to a hybrid form-and-use-based schema. In these new zoning districts, dispensaries were only permitted by-right in C, and not permitted in GC. The State adopted the Medical Marijuana Facilities Licensing Act in late 2016, which permitted fully commercialized medical marijuana facilities under one corporate owner, including grow facilities, provisioning centers (dispensaries), processors, transporters, and testing facilities. In November 2017, Council passed an ordinance opting-in to the MMFLA, allowing up to three grow/processors and seven provisioning centers (dispensaries). Two updates to the zoning code have already been proposed and recommended to Council; one, to permit provisioning centers (dispensaries) as a Special Use in the GC zoning district, and another, generally updating the specific standards and definitions for medical marijuana facilities.

As a result of these changes at both the state and local level, it is possible that some existing provisioning centers could move; it is also possible that an existing provisioning center could go out of business and another provisioning center locate in the City. During the initial medical marijuana zoning

discussion in 2011, and during the more recent zoning discussions in 2017-18, both Planning Commission and City Council have expressed concern about marijuana business density, and the need to ensure a balanced mix of services and goods in our commercial areas. This amendment would reduce density significantly, generally allowing for only one provisioning center per commercial area, without creating significant nonconformities.

DISCUSSION

When the 2011 zoning amendments permitting dispensaries and grow facilities were adopted, there was no cap on the number of facilities, and the industry was untested and highly stigmatized. A cap on the number of facilities was introduced in 2013, as Council felt the local market was satisfied, and further increases in the number of facilities were unwise due to uncertainty in the State and Federal regulation. Many of these facilities have been operating since 2011; the newest opened in 2013. These facilities have, overall, been in compliance with local ordinances, including permitting on-demand inspections. The crime rate at these businesses is equivalent to other retail &/or industrial businesses.

This map, as of 5/2013, shows potential locations for additional dispensaries/grow facilities; the potential distribution of facilities differed from current primarily around Washtenaw and West Michigan. The zoning around Huron River Drive has changed from the Commercial-Industrial District and a variety of other zoning classifications to predominantly GC.

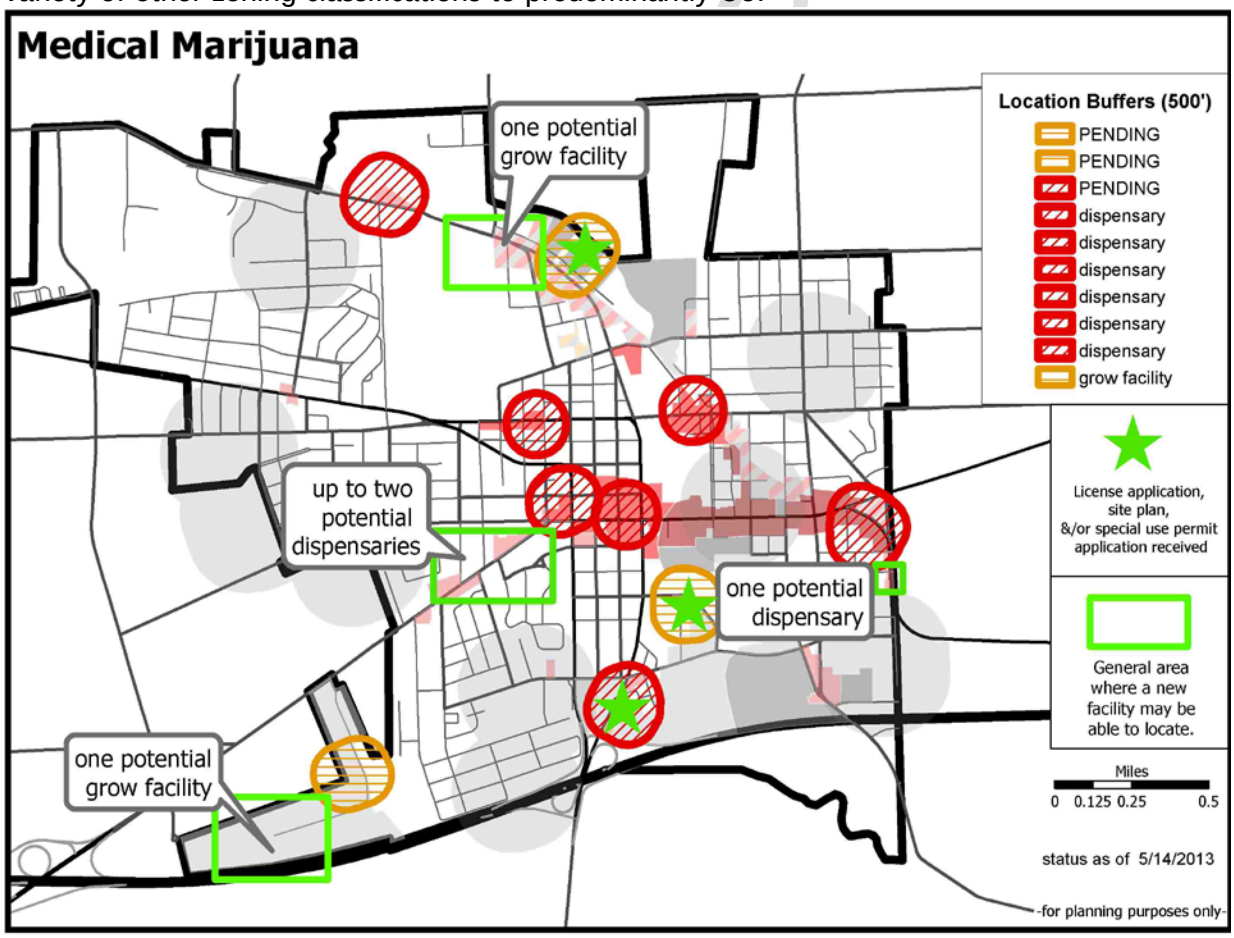

This map shows the *current* existing school buffers, facility buffers, and zoning districts. As a reminder, grow facilities are currently permitted only with a Special Use permit in GC and PMD; dispensaries are permitted by right in Center. The proposal on the table at Council would add dispensaries as a special use in the GC district. Recall also that Planning Commission has discretion in granting Special Use permits under §122-324.

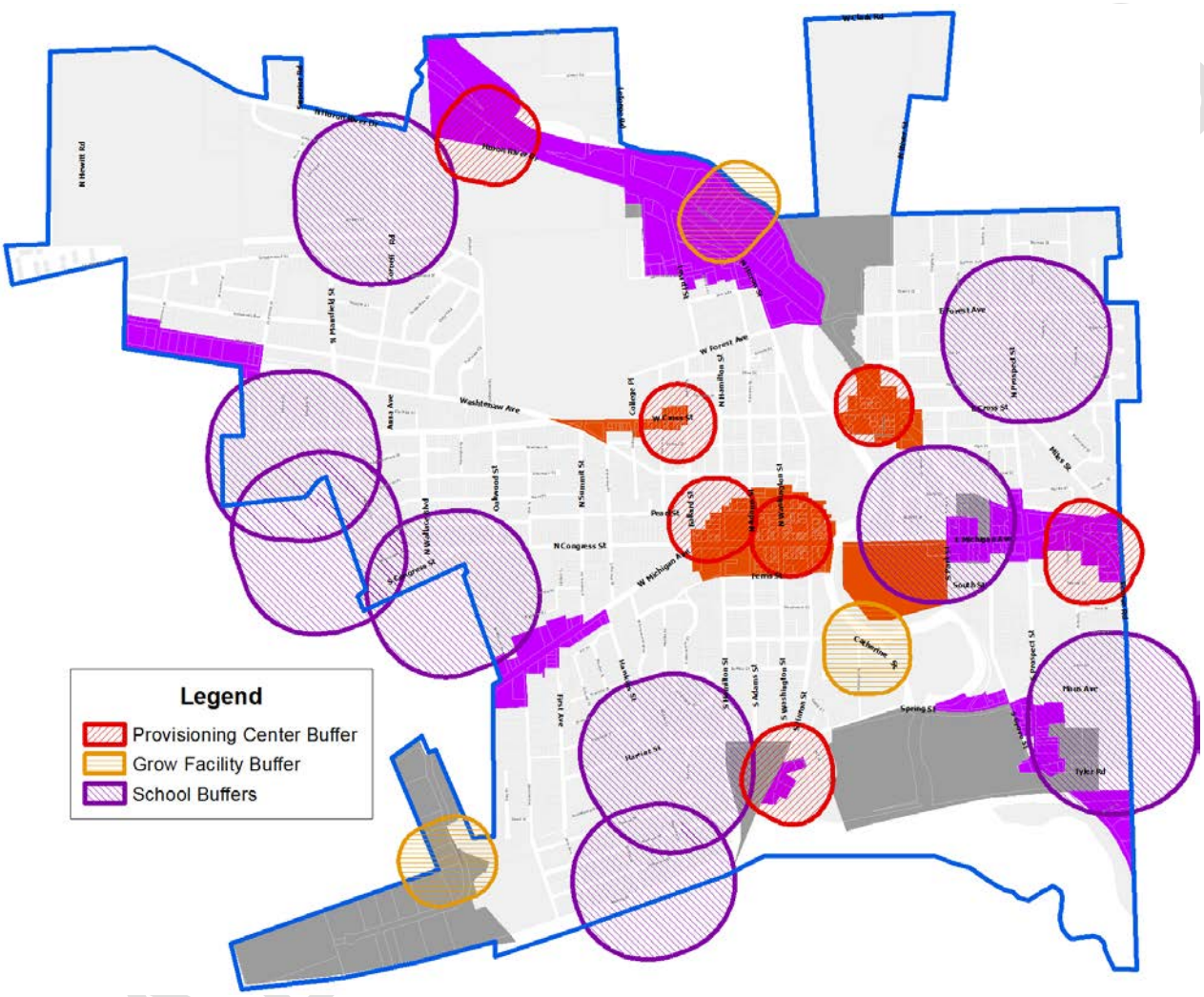

Under the proposed increase in buffers between provisioning centers, the East Michigan/Ecorse corridor cannot bear a new provisioning center, nor can Depot Town or West Cross. The two existing provisioning centers in downtown Ypsilanti would exclude each other by approximately four feet; however, Herbal Solutions is planning to move eastward once rehabilitation is complete at the new location. Commercial locations on Huron River Drive/Railroad St are already fairly constrained due to the location of the railway and river, as well as the large redevelopment site at 800 Lowell, so the expansion would have minimal effect.

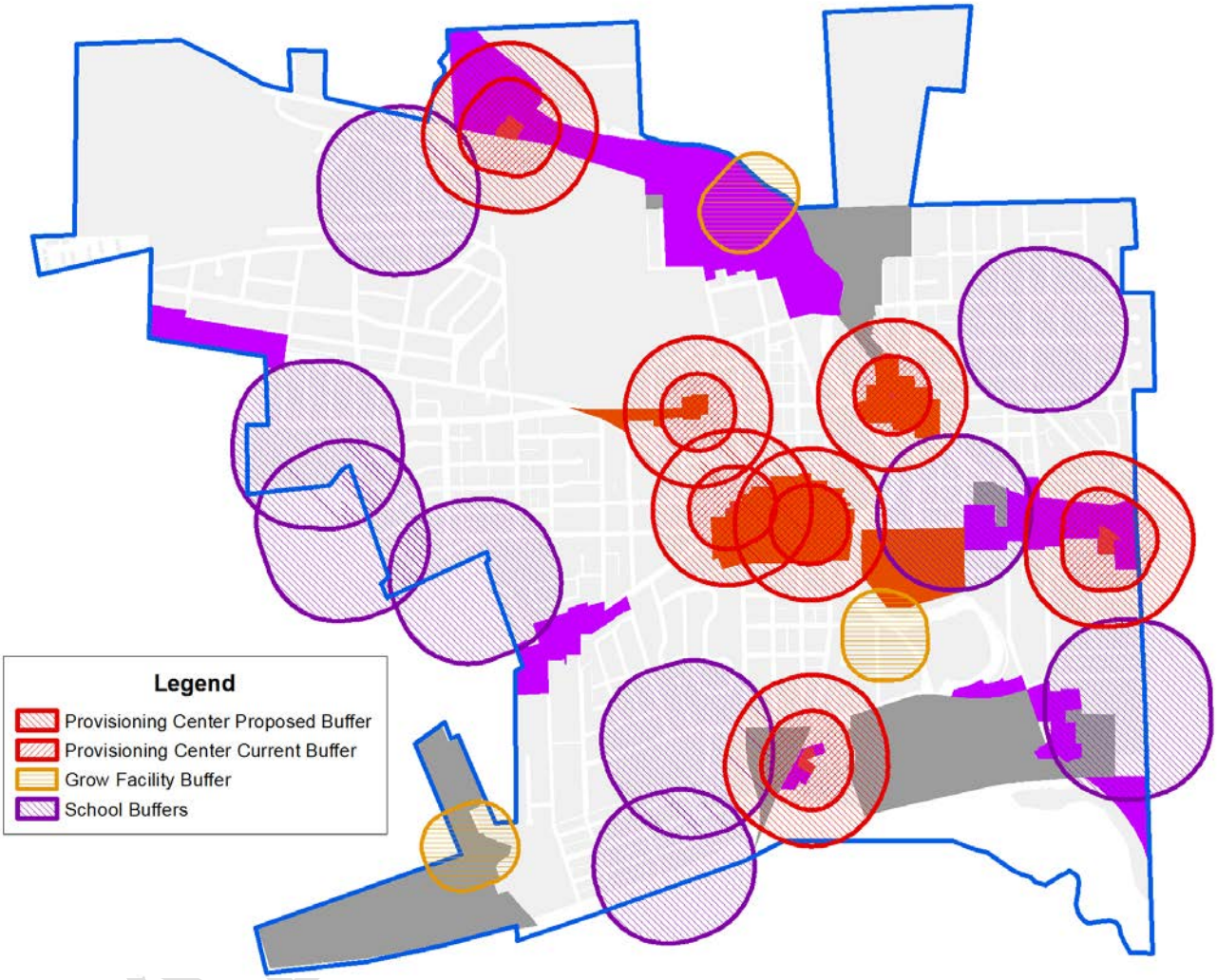

Looking more closely at specific areas, Washtenaw realistically could host two provisioning centers (one at each end), and West Michigan potentially two as well- fewer than the three and four, respectively, that would be able to locate there with the smaller buffer. West Michigan, it should be noted, has fewer commercial buildings that could presumably become available for such a venture; there do exist residential buildings that could be converted.

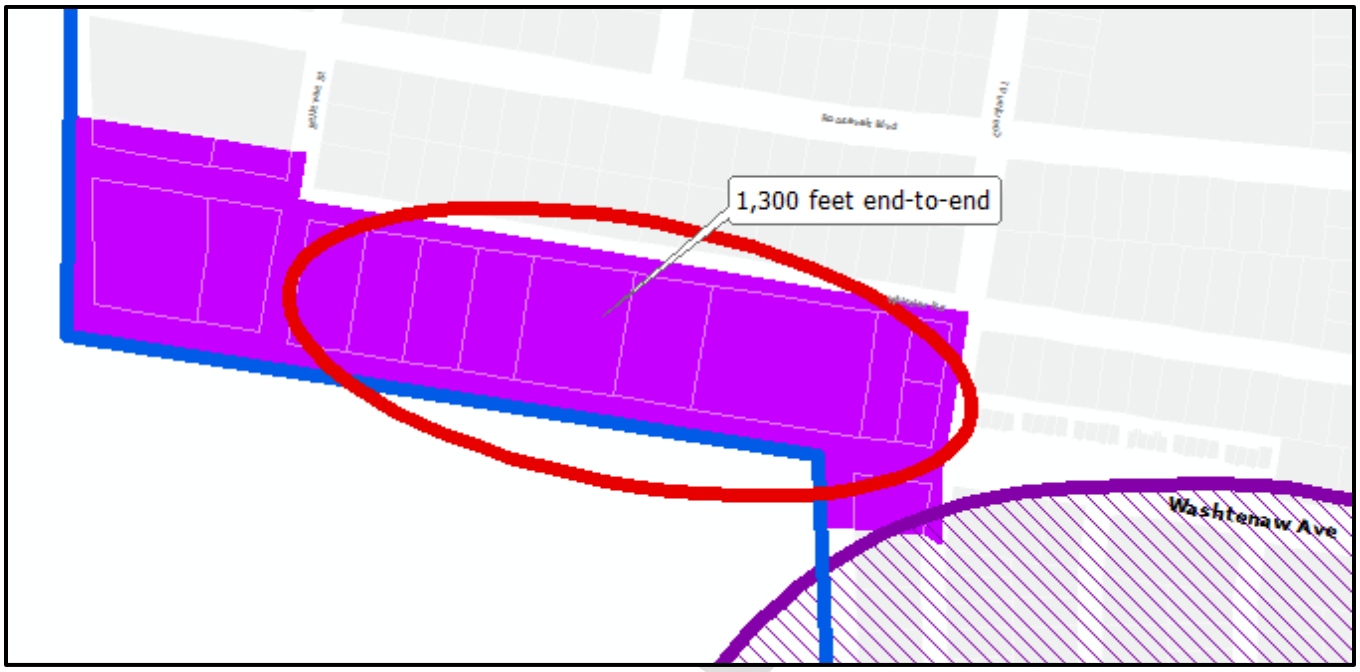

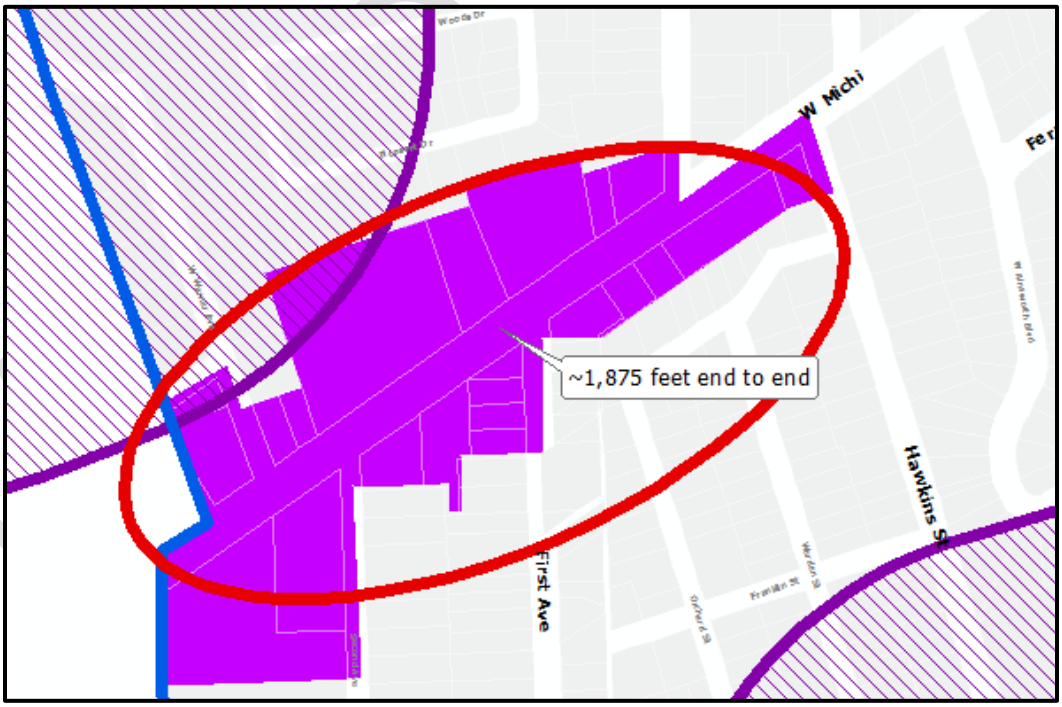

Medical Marijuana Dispensaries (recommended to become "Medical Marijuana Provisioning Centers"), 122-532(b)(3)	"Medical Marijuana Provisioning Centers," 122-532(b)(3) (changes proposed 2/21 presumed adopted)
The dispensary shall not be located within a five hundred (500) feet of a lawfully existing medical marijuana dispensary or growing/manufacturing facility as measured from the outermost boundaries of the lot or parcel on which the proposed dispensary and lawfully existing dispensary or growing/manufacturing facility is located;	The provisioning center shall not be located within a five hundred (500) feet of a lawfully existing medical marijuana growing &/or processing facility nor within one thousand (1,000) feet of a lawfully existing medical marijuana provisioning center as measured from the outermost boundaries of the lot or parcel on which the proposed medical marijuana facility and to the outermost boundaries of the lot or parcel on which the lawfully existing medical marijuana facility is located;

STANDARDS FOR AMENDMENTS §122-362(a)

(a) ***Text Amendment.*** *For a change to the text of the Zoning Ordinance, the Planning Commission shall consider and the City Council may consider, whether the proposed amendment meets the following standards:*

(1) The proposed amendment is consistent with the guiding values of the Master Plan; and
Applicable guiding values of the Master Plan include:

- Diversity is our strength: per the decision-making rubric. This maintains and potentially improves the diversity of the mix of businesses in Ypsilanti.
- Ypsilanti is sustainable: per the decision-making rubric, this action maintains, and has the potential to create, job opportunities for Ypsilantians, without over-investing into a volatile industry.

(2) The rezoning is consistent with description and purpose of the proposed district, and.
This would apply to all Provisioning Centers in all districts.

(3) The proposed amendment is consistent with the intent of this Zoning Ordinance; and
Per §122-100, the intent of the ordinance is to promote the public health, safety, and welfare. In particular, to:
• "create a safe, diverse, and sustainable city;
• meet the needs of the City's residents for food, fiber, energy, and other natural resources;
• guide the location of places of residence, recreation, industry, trade, service, and other uses of land;
• ensure that uses of the land shall be situated in appropriate locations and relationships;
• limit the inappropriate overcrowding of land and congestion of population and transportation systems and other public facilities;
• facilitate adequate and efficient provision for transportation systems, sewage disposal, water, energy, education, recreation, and other public service and facility needs;"
By increasing the distance between Provisioning Centers, it reserves space for other businesses to grow and thrive within the City, while still preserving access to medical marijuana.

(4) The proposed amendment will enhance the functionality, transportation network or character of the future development in the City; and

TABLED 03-2018

The change to the zoning ordinance has the long-term potential to do so. In the short-term, it will simply preserve the existing character of the City.

(5) The proposed amendment will preserve the historic nature of the surrounding area and of the City;
Staff does not anticipate that this amendment will negatively or positively affect the historic nature of the City.

(6) The proposed amendment will enhance the natural features and environmental sustainability of the City;
Staff does not anticipate that this amendment will negatively affect the natural features or environmental sustainability of the City.

(7) The proposed amendment will protect the health, safety, and general welfare of the public; or
The proposed change to the zoning ordinance will help maintain residents' access to medical marijuana, as prescribed by their doctor. The ordinance amendment will also help to reduce the potential that relatively volatile medical marijuana businesses might displace existing businesses in less-volatile industries.

(8) The proposed amendment is needed to correct an error or omission in the original text; or
This does not correct an error; it is an amendment due to a changing regulatory environment.

(9) The proposed amendment will address a community need in physical or economic conditions or development practices; and
Staff does not anticipate that this change will significantly impact a community need in physical or economic conditions. If the industry continues to grow, it is possible that medical marijuana businesses could reinvest significantly into their businesses. However, it is also possible that the businesses will face increasing regulatory hurdles at the federal level, and medical marijuana still carries some stigma. This amendment would decrease the potential impacts of both any stigma and the potential for an industry collapse due to regulatory issues.

(10)The proposed amendment will not result in the creation of significant nonconformities in the City.
The proposed amendment will make nonconforming the two dispensaries in downtown Ypsilanti. However, as noted, Herbal Solutions is in the process of preparing a space to the east that would conform under the new ordinance.

STAFF RECOMMENDATION

Staff recommends the Planning Commission recommend to City Council the ***approval*** of the proposed text amendment to 122-532(b)(3), "Medical Marijuana ~~Dispensaries~~ Provisioning Centers", with the following findings:
(1) The proposed amendment is consistent with the guiding values of the Master Plan;
(2) The proposed amendment is consistent with the intent of this Zoning Ordinance;
(3) The proposed amendment will protect the health, safety, and general welfare of the public;
(4) The proposed amendment will address a community need in physical or economic conditions or development practices.

_____
Bonnie Wessler
City Planner, Community & Economic Development Division

TABLED 03-2018

City of Ypsilanti
Community & Economic Development Department

January 2019

Text Amendments
Firearms

GENERAL INFORMATION

Applicant:	Staff
Action Requested:	Zoning Ordinance Text Amendment to address firearms sales and commercial recreational use.
Staff Recommendation:	Recommendation to City Council for approval.

BACKGROUND

The Planning Commission introduced a discussion regarding firearms and City regulations regarding their sale and commercial use within the City first at the March 2018 meeting, and heard presentations from staff and invited public comment at the June and July meetings. Currently, commercial sale of firearms is permitted wherever commercial sales are permitted, and commercial recreational/educational use is permitted wherever indoor/outdoor commercial use is permitted (indoor or outdoor recreation, generally). The Planning Commission has expressed interest in updating these regulations to be more reflective of how the City regulates other dangerous &/or controversial items.

City of Ypsilanti Zoning Authority

Zoning ordinances are enacted to protect the health, safety, and welfare of the public. There are limitations on what a zoning ordinance can and cannot do; some of these limitations are established by State law, others by Federal law, and others by case law.

Michigan is a “home rule” state, and local municipalities derive their power from the state. There are areas of law in which the state “pre-empts” the field; that is, they have chosen to regulate an area and municipalities have no power to further regulate it. The state has pre-empted the field of gun control, but case law has shown that municipalities may still regulate where firearms businesses may locate. (See attached attorney opinions regarding both sales and ranges.) “Gun control” is generally considered, for the purposes of this report, to consist of controls on owning and carrying a firearm.

Zoning addresses other items that are often controversial. Signs, which are strongly protected by the First Amendment, are regulated by the Zoning Ordinance for time, place, and manner and by the Building Code for structural safety. Adult regulated uses are uses such as strip clubs and stores which primarily sell sexually explicit material, also protected by the First Amendment. These uses are also regulated for time, place, and manner under the Zoning Ordinance, and the structures that house these uses must meet the same standards for structural safety under the Building Code as any other structure.

These statements are, of course, vast simplifications of quite a bit of law at the federal, state, and local level as well as a vast body of case law.

OTHER COMMUNITIES

Staff reviewed regulations in more than fourteen Michigan communities who had regulations online and searchable.

- One municipality regulated whether pistols could be taken in pawn shops
- Nine municipalities regulated where archery &/or gun ranges could be located (one allowed for archery ranges, but explicitly prohibited gun ranges; another allowed only for "police small arms firing ranges")
- One municipality prohibited "All uses involving the distribution of firearms or the storage of firearms intended for sale or distribution are prohibited as home occupations."
- One municipality regulated "firearms sales establishments" to a special use in one business district, and in the same manner as their equivalent of our "adult regulated uses."

ZONING: HOME OCCUPATIONS

Kalamazoo places the following restriction on home occupations:
"All uses involving the distribution of firearms or the storage of firearms intended for sale or distribution are prohibited as home occupations."

The equivalent place in the City's Zoning Code of Ordinances is 122-527(a), "Prohibited Home Occupations." This currently reads (formatted for clarity):
"The following are not permitted as home occupations:

- animal grooming establishments,
- barber shops or beauty parlors with more than one stylist or chair,
- medical clinics or hospitals with more than one practitioner and one non-practicing staff,
- commercial stables,
- day care centers,
- kennels,
- real estate offices,
- restaurants,
- vehicle repair or painting,
- retail or wholesale sales of any items stocked on the premises,
- landscape installation and maintenance businesses,
- construction contractors,
- snow removal,
- funeral homes,
- nursing homes,
- antique shops,
- bed and breakfast establishments,
- private clubs,
- trailer rentals,
- adult regulated uses,
- millinery and other apparel shops,
- veterinarian's office, clinic or hospital, or
- any use that endangers the health, safety, and welfare of any other persons residing in that area by reason of noise, noxious odors, unsanitary or unsightly conditions, fire hazards and the like.

DRAFT

- This section is not intended to prohibit offices related to the administration of construction contracting, landscaping, maintenance, or snow removal businesses."

Staff recommends that the item "any use involving the distribution of firearms or the storage of firearms intended for sale or distribution" or similar wording as determined after consultation with legal counsel, be added to this list.

ZONING: FIREARMS RANGES

There are several ordinances in the compared communities which work to appropriately locate firearms ranges (shooting ranges, rifle ranges, etc) within their communities. It appears that communities with a rural character permit for outdoor ranges; more urban or built communities do not. This is likely due to the lack of suitably large properties to accommodate outdoor shooting safely. As the City is likewise space-constrained, permitting for indoor ranges only is likely the course of action that best addresses the health, safety, and welfare of the community. It is also possible to have separate ranges and stores; I would recommend separating these uses in the definitions and in the table of permissible uses, but allowing stores to be accessory to ranges. Finally, it appears that indoor firearms ranges are often relegated to the industrial areas of the community; this is likely due to the built form of a modern standalone range resembling most closely that of a simply built large block building.

Although firearms will only be planned to be used inside a firearms range within the designated space, the high volume of firearms being moved from vehicles to indoors and back again introduces a potential point of failure, particularly with people who may be learning firearms handling. As the range of a stray bullet can be quite far, we do recommend setting a distance away from parks, schools, daycare centers, Eastern Michigan University, and the walkable Center districts, where larger numbers of people tend to congregate outdoors. Staff reviewed maximum projectile range for a number of weapon and ammunition types from Michigan's online Hunter Education course, available at https://www.hunter-ed.com/michigan/studyGuide/Maximum-Projectile-Range-Rifle/201023_700042734/. However, as the chances of an unobstructed path between a range and these locations is low, it is reasonable to set a shorter distance, such as 500', which would allow any stray projectile an opportunity to come to a halt before reaching the aforementioned areas.

We do also recommend that firearms ranges be located at some distance from establishments that sell alcohol, such as party stores (stores less than 15,000 square feet with sales of alcohol) and bars.

Staff recommends Indoor Firearms Ranges be permissible as a Special Use within the PMD district, when not within 500' of public parks, daycare centers, grade schools, Eastern Michigan University, and the Center District, as well as 500' away from a store less than 15,000 square feet with sales of alcohol or a bar/lounge. Staff further recommends one parking space be provided per shooting booth/lane or firing position, plus as required for any retail or office space on site, to help ensure compliance with regulations regarding transporting firearms safely.

ZONING: ARCHERY RANGES

Archery ranges can be treated in a way similar to firearms ranges, as modern bows are capable of shooting an arrow a very long distance with good power; however, the range is significantly less than firearms, and a stray shot from a bow will often have less power than a fair shot, unlike firearms. Planning Commission may consider adding them to the list of example uses under the definition of "indoor recreation," or including them with firearms ranges. Due to space constraints of the built environment, staff does not recommend permitting outdoor archery ranges.

DRAFT

ZONING: FIREARMS SALES

Staff was able to locate only one municipality that restricted locations of firearms sales as commercial businesses; Inkster. This appears to have been in response to an undesirable number of such businesses locating in prominent locations amongst the community, and has been incorporated into their "adult regulated uses" ordinance.

The City of Ypsilanti's Adult Regulated Uses are relegated to the PMD district, and further carry the following restrictions per 122-512:

Sec. 122-512. Adult regulated uses.

(a) In the development and execution of this section, it is recognized that there are certain uses, which by their very nature are recognized as having serious objectionable operational characteristics, particularly when several of them are concentrated in a small area, thereby having a deleterious effect on surrounding neighborhoods. Regulation of the location of these uses is necessary to ensure that the adverse effects of such businesses will not cause or contribute to the blighting or downgrading of the City's residential neighborhoods or commercial centers. It is the intent of this section to provide reasonable regulations for the establishment of adult regulated uses in a viable, accessible location where the adverse impact of their operations may be minimized. Uses subject to these regulations and the requirements of Article V of Chapter 10 are as follows:
  (1) Adult: Adult book or supply store, adult hotels or motels, adult motion picture theater/adult live stage performing theater, and adult mini-motion picture theater.
  (2) Cabarets.
  (3) Massage parlors and massage establishments.
  (4) Pawnshops.

(b) No adult regulated use may be permitted within 1,000 feet of any other adult regulated use. Measurement of the 1,000-foot radius must be made from the outermost boundaries of the lot or parcel on which the adult regulated use is proposed. The Planning Commission may waive this requirement for pawnshops if the following findings are made that:
  (1) The proposed use will not be contrary to the public interest or injurious to nearby properties, and that the spirit and intent of this article is observed.
  (2) The proposed regulated use will not enlarge or encourage the development of a "skid-row" or blighted area.
  (3) The establishment of an additional adult regulated use in the area will not be contrary to any program of neighborhood conservation nor will it interfere with any program of urban revitalization.
  (4) All applicable regulations of this chapter will be observed.

  The Planning Commission may not waive this locational requirement for adult uses, cabarets, massage parlors, or massage establishments.

(c) No adult regulated use may be permitted within 500 feet of any R1, HHS, P, MD, CN, CN-Mid and CN-SF district; nor may any adult regulated use be permitted within 500 feet of any school, park, library, playground, movie theater, licensed child care facility, or any other area or use where minor children are likely to congregate; nor may any adult regulated use be permitted within 500 feet of any religious institution. Measurement must be from the outermost boundaries of the lot or parcel on which the adult regulated use is proposed to be located. This prohibition may be waived if the Planning Commission is presented with a validated petition requesting such waiver, signed by two-thirds of all persons owning, residing in, or doing

DRAFT

business in the area within 500 feet of the proposed adult regulated use. The circulator of the petition must sign an affidavit attesting that the circulator personally witnessed the signatures and the signatures were affixed to the petition by the person whose name appears thereon. The signatures must be validated by the community economic development department. The Planning Commission cannot consider the waiver of the locational requirements until the required petition has been duly filed and verified. Pawnshops are not be subject to these locational requirements.

(d) The building and premises must be designed and constructed so that material depicting, describing, or relating to specified sexual activities or specified anatomical areas, cannot be observed by pedestrians or from vehicles on any public right-of-way. This provision must apply to any display, decoration, sign, show window, or other opening.

(e) No person may reside in or permit any person to reside in the premises of an adult regulated use.

(f) Such uses must comply with all applicable federal, state, and local licensing regulations. Initial and annual proof of such compliance must be a condition of special use approval and the continuance thereof.

(g) Upon finding that any condition, safeguard, or requirement has been breached, the Building Department can revoke any occupancy permit. All operations must cease 14 days following such notification of revocation by the Building Department, unless such violations are corrected. Also, if violations are not corrected within 14 days, reinstatement of a revoked permit must require a new special use application and approval thereof.

This ordinance dates to the mid-1990s, and has not been updated in a significant sense since then. Staff has mapped the permissible areas to operate an adult regulated business under the ordinance- which appears to limit them to about 12 properties. (see map: dark grey is the permissible district; if the red lines intersect it, it is disqualified from use). Due to this, staff does not recommend incorporating Firearms Sales Establishments into the adult regulated use ordinance we have in place.

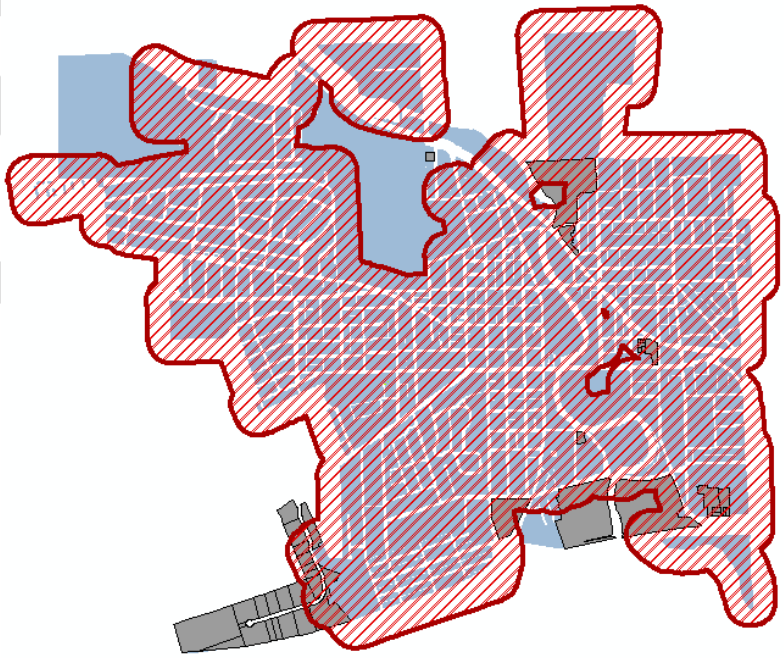

Staff recommends allowing Firearms Sales Establishments as a Special Use in GC and S/Res (special use when adjacent to residential, otherwise permitted) in PMD, with the following locational restrictions:

- **500' away from public parks, daycare centers, grade schools, Eastern Michigan University, and the Center District;**
- **500' away from pawn stores or secondhand goods dealers;**
- **500' away from a store less than 15,000 square feet with sales of alcohol, or a bar/lounge.**

Staff has not mapped these distances, and simply presents these for discussion.
MAP THESE DISTANCES

Inkster has also produced a definition of "firearms sales establishment." This definition excludes stores that sell firearms as only a portion of their overall business (ex. Meijer, Cabela's, some ranges, etc).

> Inkster's firearms definition: "FIREARMS SALES ESTABLISHMENT. A place of business of a firearms dealer. A firearms dealer is any person engaged in the wholesale or retail sale of firearms, the repair of firearms, or the creation or fitting of special barrels, stocks, or trigger mechanisms for firearms. A FIREARMS SALES ESTABLISHMENT shall be defined as only those establishments principally engaged in the display or sale of firearms or ammunition. A FIREARMS SALES ESTABLISHMENT is not a store of a generally recognized retail nature, which may include firearms or ammunition as an incidental and accessory use."

This definition could be interpreted to include firearms ranges and home occupations. Amending the final sentence to read "A FIREARMS SALES ESTABLISHMENT is not a store of a generally recognized retail nature, which may include firearms or ammunition as an incidental and accessory use<u>, nor a range where less than half of the public area is devoted to sales, nor a home occupation.</u>" (underlined words added.)

Staff believes that this amended definition would be sufficient for use in Ypsilanti, upon review and acceptance by legal counsel.

SUMMARY: FIREARMS AMENDMENTS

Staff recommends that Planning Commission recommend that City Council approve the following amendments to the zoning code:

- Amend **122-203** to add the definition of "firearms sales establishment" as "a place of business of a firearms dealer. A firearms dealer is any person engaged in the wholesale or retail sale of firearms, the repair of firearms, or the creation or fitting of special barrels, stocks, or trigger mechanisms for firearms. A firearms sales establishment shall be defined as only those establishments principally engaged in the display or sale of firearms or ammunition. A firearms sales establishment is not a store of a generally recognized retail nature, which may include firearms or ammunition as an incidental and accessory use, nor a range where less than half of the public area is devoted to sales. This does not include home occupations."

- Amend **122-203** to add the definition of "indoor firearms range" as "an indoor facility operated for the purpose of shooting with firearms, whether publically or privately owned and whether or not operated for profit."

- Amend **122-431** and **122-451** to permit firearms sales establishments to locate as a Special Use in GC and Special Use when adjacent to residential, otherwise permitted, in PMD, referencing a newly created section in Article V, Use Restrictions, Division 1: Specific Standards for Certain Uses, providing the following locational restrictions for firearms sales locations:
    - 500' away from public parks, daycare centers, grade schools, Eastern Michigan University, and the Center District; and
    - 500' away from pawn stores or secondhand goods dealers; and

  - 500' away from a store less than 15,000 square feet with sales of alcohol, or a bar/lounge.

- Amend **122-431** to permit firearms ranges to potentially locate as a Special Use within the PMD district, referencing a newly created section in Article V, Use Restrictions, Division 1: Specific Standards for Certain Uses, with the following locational restrictions:
  - 500' away from public parks, daycare centers, grade schools, Eastern Michigan University, and the Center District, and
  - 500' away from a store less than 15,000 square feet with sales of alcohol, or a bar/lounge.

- Amend **122-527(a)**, Home Occupations, to prohibit as a home occupation any use involving the distribution of firearms or the storage of firearms intended for sale or distribution.

- To further amend **Article V, Use Restrictions, Division 1: Specific Standards for Certain Uses**, to ensure that the newly created sections are located in alphabetical order; sections in said Division are re-numbered, and that references to those sections are updated throughout the Chapter.

Further, staff recommends that Planning Commission recommend that City Council direct legal counsel to review Chapter 82 and provide recommendations regarding limiting the acceptance of firearms by secondhand goods establishments within the City.

STAFF RECOMMENDATION

Staff recommends the Planning Commission recommend City Council ***approval*** of the text amendment "Firearms Amendments" with the following findings:

1. The amendments are consistent with the guiding values of the Master Plan.
2. The amendments are consistent with the intent of the zoning ordinance.
3. The proposed amendment will enhance the functionality and character of the future development in the City.
4. The proposed amendment will protect the health, safety, and general welfare of the public.
5. The proposed amendment will not result in the creation of nonconformities.

Further, staff recommends that Planning Commission recommend that City Council direct staff to review Chapter 82 and provide recommendations regarding limiting the acceptance of firearms by secondhand goods establishments within the City.

_____

Bonnie Wessler
City Planner, Community & Economic Development Division

c.c. File

DRAFT

Barr, Anhut & Associates, P.C.
ATTORNEYS AT LAW

105 Pearl Street
Ypsilanti, MI 48197
(734) 481-1234
Fax (734) 483-3871
www.barrlawfirm.com
e-mail: jbarr@barrlawfirm.com

John M. Barr
Karl A. Barr
Daniel J. DuChene

Jesse O'Jack ~ Of Counsel
William F. Anhut ~ Of Counsel – Retired
Jennifer A. Healy~ Legal Assistant

MEMORANDUM

To: **Bonnie Wessler, Ypsilanti City Planner**
From: **John M. Barr, Ypsilanti City Attorney**
Date: **March 8, 2018**
Re: **Regulation of firearms in city**

You have advised me that there are several inquiries of opening a store for the sale of firearms in the city. You requested an opinion of the extent that the city may regulate this activity. The answer is that the city may not regulate gun sales, but may zone where guns may be sold in the city.

Michigan municipalities are political subdivisions of the state and derive all their power from the state. *Tally v City of Detroit*, 54 Mich. App. 328 (1974).

Municipalities have no power to regulate when the state "preempts" the field. *People v Llewellyn*, 401 Mich 314 (1977).

The state of Michigan has by legislation preempted the field of gun control and prohibited all local units of government from gun control, MCL 123.1102:

> A local unit of government shall not impose special taxation on, enact or enforce any ordinance or regulation pertaining to, or regulate in any other manner the ownership, registration, purchase, sale, transportation, or possession of pistols, other firearms... except as provided by federal law or a law of this state.

There are some limited exceptions in MCL 123.1103 that allow municipalities to place limited restrictions on municipal employees regarding the possession of firearms in the course of their employment.

Barr, Anhut & Associates, P.C.
ATTORNEYS AT LAW

105 Pearl Street
Ypsilanti, MI 48197
(734) 481-1234
Fax (734) 483-3871
www.barrlawfirm.com
e-mail: jbarr@barrlawfirm.com

John M. Barr
Karl A. Barr
Daniel J. DuChene

Jesse O'Jack ~ Of Counsel
William F. Anhut ~ Of Counsel – Retired
Jennifer A. Healy~ Legal Assistant

The case of *Michigan Coalition for Responsible Gun Owners v City of Ferndale*, 256 Mich App 401 (2003) relied on this statute in holding that the state had preempted the field of regulation of firearms and upheld a lower court ruling that the City of Ferndale could not make city buildings gun-free zones.

In *Morgan v United States DOJ*, 473 F. Supp.2d 756 (ED Mich 2007), the court upheld a Redford Township zoning ordinance regulating the areas where the sale of guns could occur.

I have attached copies of MCL 123.1102 and 1103 for your convenience.

FIREARMS AND AMMUNITION (EXCERPT)
Act 319 of 1990

123.1102 Regulation of pistols, other firearms, pneumatic guns, or ammunition.

Sec. 2.

A local unit of government shall not impose special taxation on, enact or enforce any ordinance or regulation pertaining to, or regulate in any other manner the ownership, registration, purchase, sale, transfer, transportation, or possession of pistols, other firearms, or pneumatic guns, ammunition for pistols or other firearms, or components of pistols or other firearms, except as otherwise provided by federal law or a law of this state.

History: 1990, Act 319, Eff. Mar. 28, 1991 ;-- Am. 2015, Act 29, Eff. Aug. 10, 2015

© 2017 Legislative Council, State of Michigan

Rendered 3/8/2018 09:19:17
© 2018 Legislative Council, State of Michigan

Michigan Compiled Laws Complete Through PA 40 of 2018
Courtesy of www.legislature.mi.gov

FIREARMS AND AMMUNITION (EXCERPT)
Act 319 of 1990

123.1103 Local unit of government; permissible prohibitions or regulation.

Sec. 3.

This act does not prohibit a local unit of government from doing any of the following:

(a) Prohibiting or regulating conduct with a pistol, other firearm, or pneumatic gun that is a criminal offense under state law.

(b) Prohibiting or regulating the transportation, carrying, or possession of pistols, other firearms, or pneumatic guns by employees of that local unit of government in the course of their employment with that local unit of government.

(c) Regulating the possession of pneumatic guns within the local unit of government by requiring that an individual below the age of 16 who is in possession of a pneumatic gun be under the supervision of a parent, a guardian, or an individual 18 years of age or older, except that an ordinance shall not regulate possession of a pneumatic gun on or within private property if the individual below the age of 16 is authorized by a parent or guardian and the property owner or legal possessor to possess the pneumatic gun.

(d) Prohibiting an individual from pointing, waving about, or displaying a pneumatic gun in a threatening manner with the intent to induce fear in another individual.

History: 1990, Act 319, Eff. Mar. 28, 1991 ;-- Am. 2015, Act 29, Eff. Aug. 10, 2015

© 2017 Legislative Council, State of Michigan

Barr,
Anhut &
Associates, P.C.
ATTORNEYS AT LAW

105 Pearl Street
Ypsilanti, MI 48197
(734) 481-1234
Fax (734) 483-3871
www.barrlawfirm.com
e-mail: jbarr@barrlawfirm.com

John M. Barr
Karl A. Barr

Jesse O'Jack ~ Of Counsel
William F. Anhut ~ Of Counsel – Retired
Jennifer A. Healy~ Legal Assistant

MEMORANDUM

To: **Bonnie Wessler, Ypsilanti City Planner**
From: **John M. Barr, Ypsilanti City Attorney**
Date: **January 10, 2019**
Re: **Firearm/shooting ranges**

You have inquired whether a city may regulate firearm/shooting ranges. The answer is yes. MCL 691.1543 provides: "Except as otherwise provided in this act, this act does not prohibit a local unit of government from regulating the location, use, operation, safety and construction of a sport shooting range."

City of Ypsilanti

Community & Economic Development Department

January 2019

Text Amendments
2017-2018 Issues Update

GENERAL INFORMATION

Applicant: Staff

Action Requested: Zoning Ordinance Text Amendment to address issues that have been noted since the 2017 update.

Staff Recommendation: Recommendation to City Council for approval.

BACKGROUND

Since adopting the new ordinance schema in 2014 (enacted 2015), we have undergone one major "bug fix" update in 2016 (enacted 2017) wherein we addressed several minor issues, such as structure, numbering, and organization; as well as some issues where the ordinance was not aligned with policy and goals as laid out in the Master Plan. Staff has been tracking the performance of the code since that time and has noted several areas of potential improvement in the same vein. Those areas are as follows:

- add the processes for Nonconforming A and ZBA actions to the process table
- clarify that sketch plan approvals, etc, are subject to the same provisions
- Fix the numbering in several sections
- Parking quantity updates
- Update language "Provisioning Centers" in GC to "Medical Marijuana Provisioning Centers"; correct language regarding child care
- Explicitly state that publicly-erected signage does not require conformance to the ordinance
- Update performance guarantee standard to match adopted engineering standards
- Make properties in CN-SF eligible for Nonconforming A
- Lower accessory building setbacks in form-based districts to match accessory building setbacks in use-based districts
- ZBA member attendance requirements

PROPOSED CHANGED TEXT: SKETCH PLAN PROVISIONS

Removals are noted in strikethrough (~~strikethrough~~); additions are noted by underline (underline).

Sec. 122-308. Sketch Plans.

A sketch plan may be submitted for administrative reviews or as noted elsewhere in this Ordinance. A sketch plan is a scaled drawing based on a legal survey containing less information than a site plan, drawn in compliance with this Ordinance but not required to be prepared by a licensed professional. Sketch plans shall contain the following information:

(a) Address of project, scale, north arrow, date of original drawing, and date of any revisions.

(b) Name, address and phone number of the site owner, developer, and/or plan designer.

(c) The area of the site in square feet or acres, excluding all existing and proposed rights-of-way.

(d) Location and setbacks of existing and proposed buildings; their intended use; the length, width and height of each building; and the square footage of each building. The location and dimensions of any open air uses shall also be provided, such as recreational fields, outdoor cafes, or open air sales areas.

(e) Parking areas and access drives, showing the number and size of spaces, aisles, loading areas, and barrier-free access ramps, and type of surfacing.

(f) Landscape plan showing type, size, and location of all plant material. Existing vegetation which is to be retained on the site shall be illustrated.

(g) Location of all proposed and existing accessory structures, including fences or walls, outdoor lighting fixtures, outdoor communication devices, flagpoles, storage sheds, transformers, dumpsters or trash removal areas, and signs. Also show the location of all sidewalks or pathways, fire hydrants, and utility poles.

(h) Location of all outdoor storage areas for materials and the manner in which materials shall be screened and/or covered.

(i) Notation of any variances or special use permits which are required, any legal nonconforming uses or structures, and any state or federal permits which have been secured or may be necessary to secure.

(j) All of the provisions of this Chapter regarding violations, amendments, expirations, and approvals that apply to site plans shall have the same effect upon sketch plans.

PROPOSED CHANGED TEXT: PARKING QUANTITIES

Removals are noted in strikethrough (~~strikethrough~~); additions are noted by underline (underline).

Sec. 122-691. Minimum and maximum number of parking spaces.

The minimum number of off-street parking spaces by type of use in all zoning district shall be determined in accordance with the following schedule. The maximum number of off-street parking spaces must not exceed 120% of the required parking spaces, except for those uses in the "Residential" category, which are not subject to a maximum. The Planning Commission may grant waivers as noted in §122-692.

USE	AUTOMOBILE SPACES PER UNIT OF MEASURE
RESIDENTIAL	
Single-family detached dwellings, townhouses, and two-family dwellings	~~1 space per unit~~ No minimum.
Multiple-family dwellings~~, including townhouses~~	1.5 for each dwelling unit, plus 1 for each 10 dwelling units for guest parking.
Upper-story residential units in C, HC, NC, GC, and HHS districts	1 for each dwelling unit.
~~Group living with support staff, not licensed by State of Michigan~~	~~1 for each 3 beds, plus 1 per employee on an average employment shift.~~
Group residence, roominghouse, and supportive housing	1 for each ~~bedroom or sleeping room~~ 4 residents, plus 1 for each employee on ~~or~~ the largest typical employment shift.
~~Adult Foster Care~~	~~1 for each 3 beds, plus 1 for each employee an average employment shift.~~
Accessory Dwelling Unit	~~1 for each dwelling unit~~ No minimum.
~~Family Child Care Home~~	~~Minimum of 1 and a maximum of 3 child-care drop off spaces.~~
RECREATION, EDUCATION & PUBLIC ASSEMBLY USES	
Religious institutions; private assembly (such as catering or clubs); performance venues & theaters; libraries, museums, and cultural or community centers; or similar facilities	1 for each 500 square feet of usable floor area, excluding area devoted to storage.
Indoor recreation, including swimming pools	1 for each ~~3~~ 4 persons who may be legally admitted at one time based on the occupancy load established by local, county, or state fire, building, or health codes, plus 1 for each employee on an average employment shift.
Primary and secondary schools, public and private	1 for each teacher, employee or administrator, plus 1 for each 10 students
Post-secondary educational institutions (public & private)	1 for each teacher, employee or administrator and 1 for each 5 students.
Municipal, county, regional & state service uses	1 for each 1,000 square feet of usable floor area.
Child care centers	1 off-street parking space per caregiver required to staff facility at the state-licensed capacity, plus 1 space for every 20 children the facility is licensed to care for.
Outdoor recreation and fields	1 for each 1,000 square feet of recreation space.
Stadiums, sports arenas, or similar places of outdoor assembly	1 for each 4 seats or 8 feet of linear bench space.
INFRASTRUCTURE	
Radio & Television Studios or Stations	1 per each 500 square feet of gross floor area.
Utility buildings	1 for each employee on an average employment shift.

USE	AUTOMOBILE SPACES PER UNIT OF MEASURE
Energy, electricity, heat generation, or sewage plants	1 for each employee on an average employment shift.
SERVICES	
Bed & Breakfasts or Inns	1 per occupancy unit plus 1 per employee on an average employment shift.
Motels, hotels or other commercial lodging establishments	1 per occupancy unit plus 1 per employee on an average employment shift; plus extra spaces for dining rooms, ballrooms, or meeting rooms as required.
Business and professional offices and services	1 per 300 square feet of usable floor area.
Funeral homes	1 per 50 square feet of assembly room, parlor and slumber room.
Laundromats	1 per 3 washing machines.
Financial service, including banks	1 per 300 square feet of usable floor area, plus stacking spaces for each drive-through transaction station as required under §122-694.
Nursing Homes	1 per 3 beds.
Hospitals	1 for each 4 patient beds, plus 1 for every 200 square feet of out-patient service area
Medical or dental offices or clinics, substance abuse treatment facilities	1 for each 300 square feet of usable floor area in waiting rooms, plus 1 for each examining room, dental chair, or similar use area.
Personal service establishments	2 spaces for each of the first 2 beauty or barber chairs, and 1½ spaces for each additional chair, or 1 for each 300 square feet of useable floor ~~area whichever is greater~~.
Self-storage facilities	1 per 200 storage units, plus 1 per 300 square feet of usable floor area of office space, plus 1 for residence, if provided.
Catering service	1 per 600 square feet of usable floor area.
All other service uses not elsewhere specified	1 for each 300 square feet of gross floor area.
COMMERCIAL	
Furniture and appliances, household equipment; repair shops; showrooms of a plumber, decorator, electrician or similar trade; and other similar uses	1 for each 600 square feet of usable floor area.
Open air businesses	1 for each 600 square feet of lot area used for open air business, plus ~~extra~~ spaces for indoor sales or office space as required.
Shopping centers or clustered commercial centers over 100,000 square feet in gross floor area	1 for each 300 square feet of gross floor area.
Arts & crafts studios	1 per 1,000 square feet plus 1 per classroom.
All other retail uses not elsewhere specified	1 for each 250 square feet of gross floor area.
RESTAURANTS	
Café, coffee shop, restaurants, tasting rooms or bar/lounge, and other establishments where food, beverages, or refreshments are sold primarily for consumption on the premises	1 for each 100 square feet of usable floor area, or 1 for each 3 persons allowed within the maximum occupancy load as established by local, county, or state fire, building or health codes; whichever is greater.
Restaurant, fast food, drive-in or drive-through	1 for each 50 square feet of customer waiting and eating areas, plus 1 for each employee in the largest employment shift, plus 8 stacking spaces for each drive-in or drive-through transaction station.
AUTO-ORIENTED	

USE	AUTOMOBILE SPACES PER UNIT OF MEASURE
Automobile filling stations	~~1 for each employee, plus~~ spaces required for other uses within the station, such as the retail floor area, carryout restaurants, subtracted by one half space for each automobile fueling position.
Automobile repair	~~1~~ 0.5 for each employee in the largest employment shift, plus 1 space for each auto service stall. In addition, stacking spaces for automobiles awaiting entrance to a service stall shall be provided as required under §122-694.
Automobile wash (automatic and self-serve) and detailing	~~1~~ 0.5 for each employee in the largest employment shift. In addition, stacking spaces for automobiles awaiting entrance to the wash facility must be provided as required under §122-694.
Motor vehicle sales and service establishments, trailer sales and rental, and boat showrooms	1 for each 500 square feet of usable floor space of sales room, plus 1 for every 500 square feet of outdoor sales area, plus 1 for each 1 auto service stall in service areas, plus 1 space per employee on the largest employment shift.
Automobile rental (parking, storage, wash & repair)	
Vehicle, Recreational Vehicle, Storage and Towing	1 for 300 square feet of office space, plus 1 space per employee on the largest employment shift.
RESEARCH	
Laboratories or research establishments	5, plus 1 for every 1.5 employees in the largest working shift; or 1 space per each 1,000 square feet of gross floor area for storage areas, and 1 space per 300 square feet of office area~~; whichever is greater~~.
PRODUCTION, MANUFACTURING & DISTRIBUTION	
Craft production	1 per 1,000 square feet
Wholesale or distribution facility	5 plus 1 for every employee in the largest working shift; or 1 for every 1,700 square feet of gross floor area, plus 1 for each 300 square feet of office area. Spaces shall also be provided for any retail or service area in addition to the above.
Assembly, processing or manufacturing	5 plus 1 for every 1½ employees in the largest working shift; or 1 space per each 1,000 square feet of gross floor area for assembly, processing and manufacturing and storage areas, and 1 space per 300 square feet of office area.
URBAN AGRICULTURE	
Community garden	None
Hydroponics, aquaculture and aquaponics and similar raising of food	5 plus 1 for every employee in the largest working shift; or 1 for every 1,700 square feet of gross floor area, plus 1 for each 300 square feet of office area. Spaces shall also be provided for any retail or service area shall be in addition to the above.

Sec. 122-692. Parking Requirement Reductions.

Off-street parking requirements may be reduced subject to the following regulations.

(a) **Transit**. Parking requirements may be reduced by up to 20 percent for buildings, structures, or uses within ~~three hundred (300)~~ seven hundred and fifty (750) feet of a commuter rail station or bus transit center or within ~~one hundred (100)~~ five hundred (500) feet of a transit stop, provided said stop or center is approachable via sidewalk. In situations where this would result in a discount of more than 10 spaces, a traffic study may be required to demonstrate that a sufficient number of vehicle drivers would immediately opt for transit, and therefore would not result in adverse parking impacts on surrounding properties. The Ride shall verify that the transit station or transit stop ~~is in a~~ is not scheduled to move in the 5-year plan for the Ride.

(b) **Car-sharing and carpooling spaces**. Parking spaces reserved, signed, and enforced for hourly car rental/car-sharing services may count as four (4) regular parking spaces. Parking spaces reserved, signed, and enforced for carpooling or vanpooling services may count as two (2) regular parking spaces.

(c) **Electric car parking/charging spaces.** Electric car spaces shall include a power outlet for use by the parked car. Such spaces should be closest to the main entrance (exclusive of barrier-free spaces). Parking spaces reserved, signed, and enforced for electric car charging stations may count as two (2) regular parking spaces.
(d) **Bicycle spaces**. Parking requirements may be reduced by one (1) space for every four (4) covered, secure bicycle parking spaces provided on site. Parking requirements may be further reduced by four (4) spaces where free showers are available for employee use within the building.
(e) **Seasonal bicycle parking.** Up to 5% of vehicle parking spaces may be occupied by bike racks April through October in the Walkable Urban Districts.
(f) **Walkable Urban Districts.** The parking requirements in each of the Walkable Urban Zoning Districts, with the exception of General Corridor, shall be halved. Planning Commission has the authority to waive 50% of the parking requirements for uses located in General Corridor with a finding that the area immediately surrounding the use is highly walkable.
(~~f~~g) **Planning Commission Authority**. The Planning Commission shall have the authority to waive the number of required off-street parking spaces, in addition to the reductions above, by up to 20%, with a finding that there is a special circumstance that particularly relates to the size of an existing parcel and building in combination, and/or character of the proposed use.

This dates back to discussions held in 2017, when it was noted that a property one block away from the transit center was only barely eligible for the transit discount. Other discounts and reductions reflect a continuation of the traditional built form and the desire to encourage a walkable, bikeable, bus-able community, in furtherance of public health.

PROPOSED CHANGED TEXT: LANGUAGE/USE TABLE TWEAKS

Removals are noted in strikethrough (~~strikethrough~~); additions are noted by underline (underline).

122-451: "Provisioning Centers" be amended to read "Medical Marijuana Provisioning Centers"

122-441: "Roominghouse" be removed, and "Group Residence" be amended to read "Group Residences and Roominghouses."

This is intended to "clean up" the text and ensure that the use tables accurately reflect the definitions and use-specific conditions elsewhere in the Code.

PROPOSED CHANGED TEXT: NUMBERING

Removals are noted in strikethrough (~~strikethrough~~); additions are noted by underline (underline).

Proposed that the subsections of section 122-683 be renumbered correctly and to remove duplicates.

PROPOSED CHANGED TEXT: PUBLIC SIGNAGE

Removals are noted in strikethrough (~~strikethrough~~); additions are noted by underline (underline).

Sec. 122-661. Generally.

(c) **Signs exempted.**
  (1) Any sign required by City ordinance or State law, as applicable. This includes, but is not limited to, address signs, Fire Department Connection signs, or signs indicating barrier-free parking locations.

(2) Any sign less than three square feet in area and five feet in height on the interior of a site placed so as to be oriented and clearly legible to persons on the site, provided that each sign be no closer than twenty feet to another such sign.
(3) Drive-Through Signs. Any use that includes a drive-through is permitted to have signs up to a maximum height of six feet and a maximum area of 32 sq. ft. per drive-through use, located in the rear of the site, when placed so as to be oriented and clearly legible to persons on the site.
(4) Signs erected by a public body. Any sign or marker erected by the City, County, State, or other municipal body is not subject to these requirements.

This reflects actual practice and the legal setting; the City, State (MDOT, MSHDA), and other governmental bodies are not required to obtain sign permits. This modification is requested to set expectations, rather than change the legal landscape.

PROPOSED CHANGED TEXT: PERFORMANCE GUARANTEES

Removals are noted in strikethrough (~~strikethrough~~); additions are noted by underline (underline).

Sec. 122-317. Performance guarantee.

(a) **Purpose**. To ensure faithful compliance with the provisions of this chapter and any conditions imposed thereunder, a performance guarantee may be required by City staff, the Planning Commission, or when appropriate the City Council to be deposited with the City. Improvements for which a performance guarantee may be required include, but are not limited to, landscaping, berms, screening, lighting, surfacing of drives, parking, traffic control devices, water or sewer line expansions, sidewalks, drainage, and other improvements.
(b) **General requirements**. A performance guarantee may be in the form of a bond, irrevocable bank letter of credit, cash deposit, or other form of security. Such guarantee shall be provided to the City Clerk, and shall be provided any time after a site plan has been approved.
(c) **Amount**. The amount of the performance guarantee shall be up to 100% of the cost of the improvements associated with the performance guarantee. Accordingly, the applicant shall provide an itemized cost estimate of the improvements, and such estimate shall be verified by the Building Department. The form of the guarantee shall be approved by the City attorney.
(d) **Failure to complete improvements**. If the applicant should fail to provide any of the site improvements according to the approved site plans within the time period specified in the guarantee, the performance guarantee shall be forfeited. The City shall rebate a proportional share of cash deposits only when requested by the depositor, based on the percent of improvements completed, as attested to by the depositor and verified by the Building Department. In cases where the provisions of this article have not been met, the amount of the aforementioned performance guarantee shall be used by the City to complete the required improvements and the balance, if any, shall be returned to the applicant.

This proposal reflects established and adopted engineering standards, which require a performance guarantee of 50% in some specific cases. Please see the adopted engineering standards at cityofypsilanti.com/permits.

PROPOSED CHANGED TEXT: CN-SF FOR NONCONFORMING A

Removals are noted in strikethrough (~~strikethrough~~); additions are noted by underline (underline).

Sec. 122-351. Class A Conditions.

The decision to grant a class A designation shall be made by the Planning Commission in writing, setting forth its findings of fact and basis for the designation. Only multiple family dwellings and/or group residence uses in R1, CN-SF, and CN-Mid shall be eligible for this designation. For changes or improvements to a class A use, site plans shall be required.

This modification reflects the initial Planning Commission recommendation to City Council in 2015, and allows existing housing stock to be rebuilt in the case of a casualty. It does not confer any rights to expand existing uses nor to establish new multifamily uses.

PROPOSED CHANGED TEXT: FORM-BASED DISTRICT ACCESSORY BUILDING SETBACKS

Proposed that the side and rear yard setbacks for detached accessory structures for the building types of ES, HS, CO, TH, and AH be amended such that the rear and side setbacks be three feet, and that they be reduced to one foot if abutting an alleyway.

This reverts the setbacks of accessory buildings to residential uses to pre-2014 levels, and more accurately reflects the dense, historic nature of these areas.

PROPOSED CHANGED TEXT: ZBA MEMBER ATTENDANCE REQUIREMENTS

Removals are noted in strikethrough (~~strikethrough~~); additions are noted by underline (<u>underline</u>).

Sec. 122-395. Establishment and membership.

(h) **Resignations**. When Zoning Board of Appeals members propose to resign, if reasonably feasible, they shall give notice of their intent in writing to the chairperson, and make the date of resignation effective in such a manner as to allow time for appointment of replacements~~. Failure to attend three consecutive regular meetings, or three of seven consecutive meetings, without recorded consent of the chairperson shall be construed as resignation from the Zoning Board of Appeals by absence.~~ When a member dies or resigns ~~(including resignation by absence)~~, the chairperson shall promptly notify the mayor that a vacancy exists.

The Charter provides for removal of members from appointed bodies.

PROPOSED CHANGED TEXT: ERROR CORRECTIONS

Removals are noted in strikethrough (~~strikethrough~~); additions are noted by underline (<u>underline</u>).

Amend 122-532(b)(5) to replace “dispensary” with “provisioning center.”

Amend 122-421, 426, 441, 451, and 461 “group child care home,” notes column, from 6-12 children to “up to 12 children” to accurately reflect the amount of children permitted.

STAFF RECOMMENDATION

Staff recommends the Planning Commission recommend ***approval*** of the text amendments to City Council with the following findings:

1. The amendments are consistent with the guiding values of the Master Plan.
2. The amendments are consistent with the description and purpose of the district.
3. The amendments are consistent with the intent of the zoning ordinance.
4. The amendments will enhance the functionality and character of the future development in the City.
5. The amendments will help preserve the historic nature of the City.
6. The amendments will enhance the environmental sustainability of the City and not negatively affect its natural features.
7. The amendments will protect the health, safety, and general welfare of the public.
8. The amendments correct an oversight in the original text.
9. The proposed amendment will not result in the creation of significant nonconformities.

Bonnie Wessler
City Planner, Community & Economic Development Division

c.c. File

City of Ypsilanti
Community & Economic Development Department

23 April 2018

Staff Review of Site Plan Application
Cultivate Coffee & Taphouse
307 N River

GENERAL INFORMATION

Applicant:	Ryan Wallace Cultivate Coffee and Tap House 307 N River St Ypsilanti, MI 48198
Project:	Cultivate Coffee & Tap House
Application Date:	16 March 2018
Location:	Depot Town, on the south-west corner of North River and Photo.
Zoning:	C, Center
Action Requested:	Approval
Staff Recommendation:	Conditional Approval.

PROJECT AND SITE DESCRIPTION

Cultivate Coffee & Tap House ("Cultivate") is located in the former Ted's Auto Electric, and has been in operation since early 2015. In 2016, they expanded their parking area to the west of the existing parking, and created an outdoor service area to the west of the existing building. This site plan submittal is in furtherance of coming into conformance with the ordinance.

307 N River is zoned **Center,** which allows for bars and restaurants, as well as outdoor cafés, as permitted and accessory uses, respectively. Outdoor cafés are subject to specific standards found in 122-540. There are no parking minimums in the Center district.

Subject Site Location

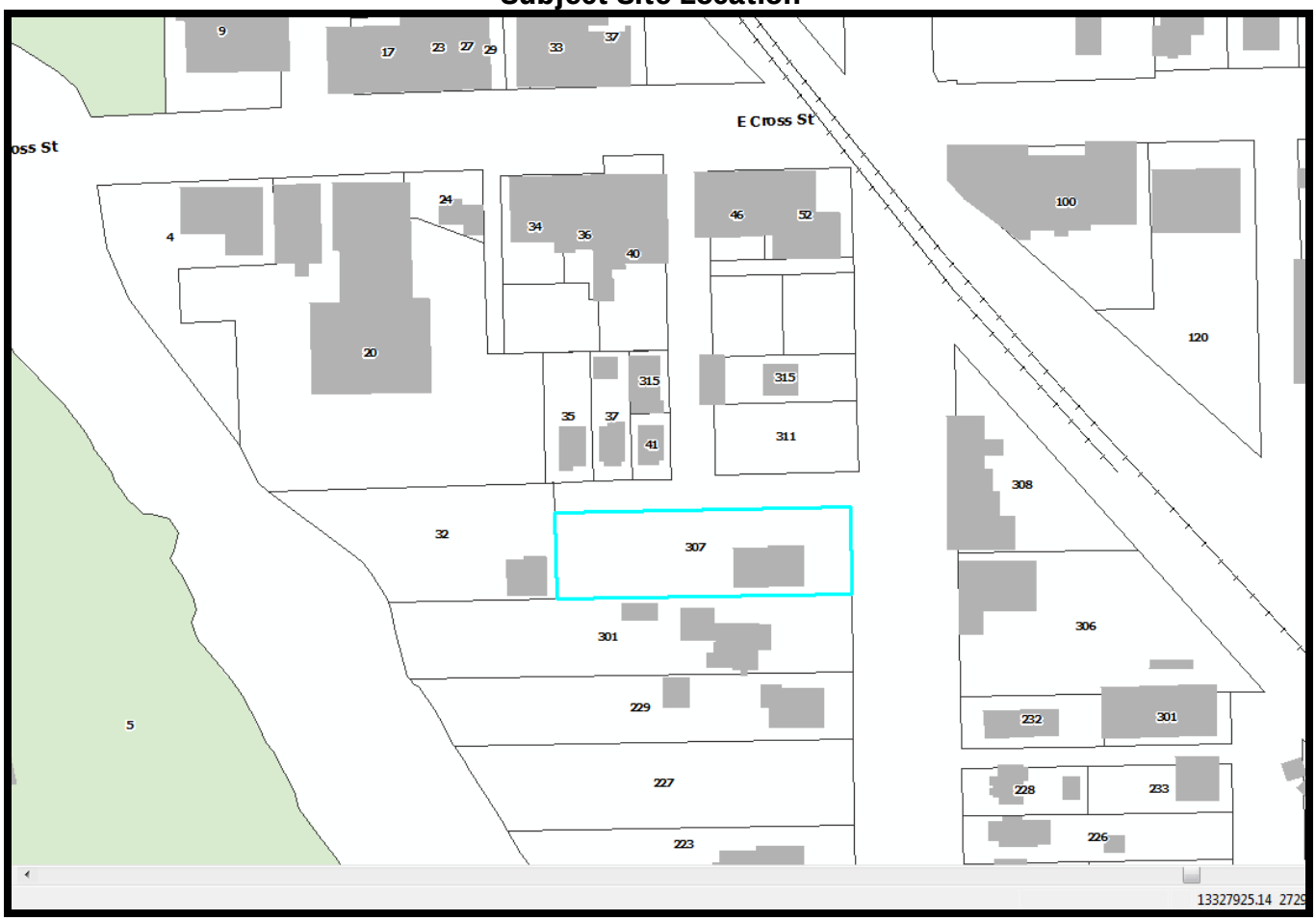

Site Aerial (2015)

Site Aerial (per Google, 2017)

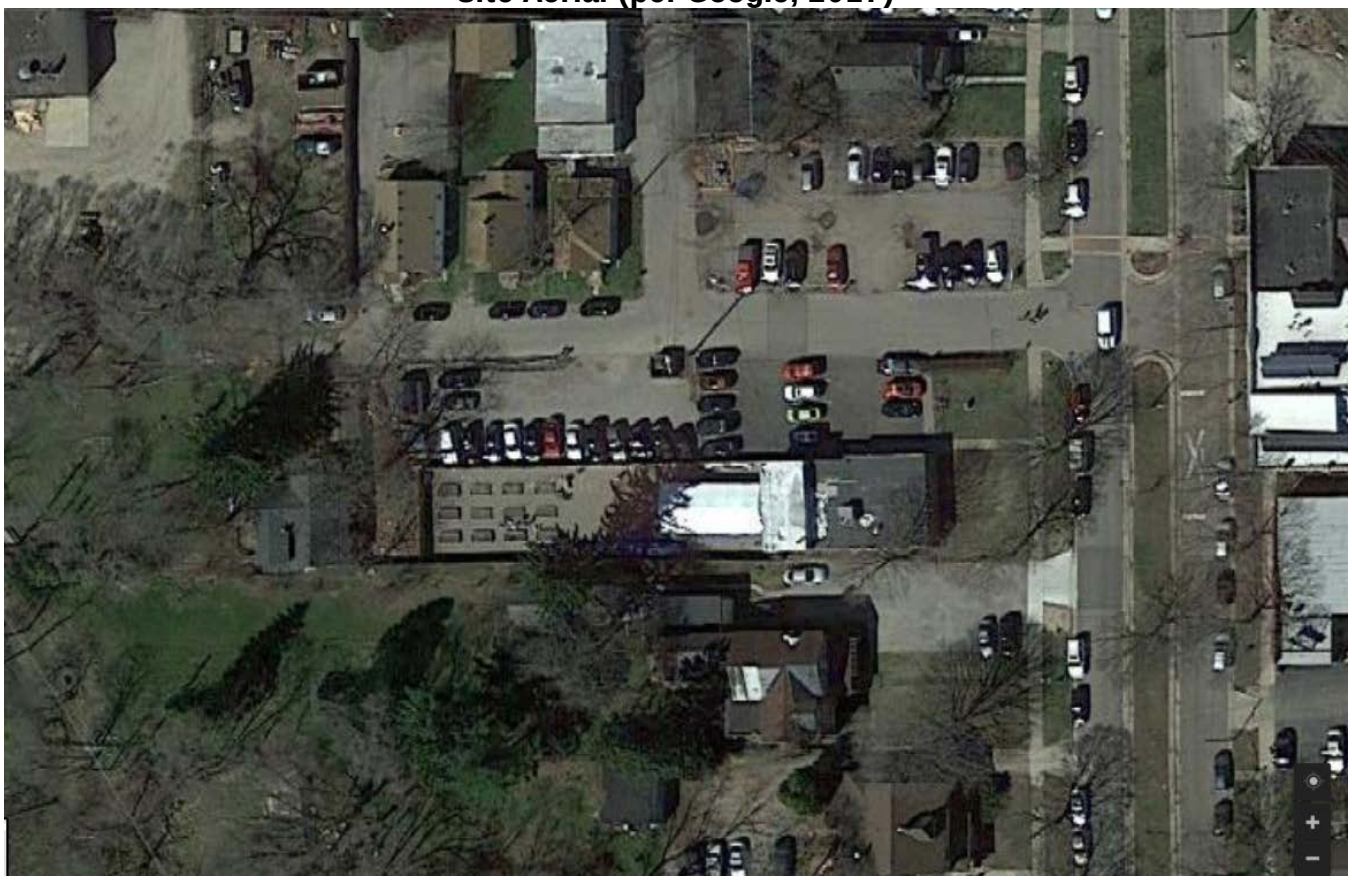

2011 Google Street View of site

2016 Google Street View of site

Land Use and Zoning of Surrounding Area

	LAND USE	ZONING
NORTH	Single family, parking	Center
EAST	Grocery store, shopping, services	Center
SOUTH	Multifamily residential	Historic Corridor
WEST	Single-family residential	Historic Corridor

SITE PLAN: CRITERIA AND REVIEW §122-311

STANDING §122-311(a)

The applicant is legally eligible to apply for site plan review, and all required information has been provided.

REQUIREMENTS §122-311(b)

"The proposed site plan conforms with all the provisions and requirements, as well as the spirit and intent of this chapter and the Master Plan. The proposed development will meet all the regulations of the zoning district in which it is located."

ORDINANCE REFERENCE		REQUIRED	EXISTING CONDITIONS	PROPOSED
C: §122-477	**BUILDING TYPE**	Determined by lot size	21,700 sf Single story commercial	Unchanged Existing nonconforming building type
	LOT: Unchanged.			
	BUILDING ENVELOPE AND HEIGHT: Unchanged.			
	ACCESSORY BUILDING ENVELOPE, FOOTPRINT, AND HEIGHT: Unchanged.			
	PARKING PROVISIONS	Permitted in the side, street side, and rear yards	Street Side	**Expanded street side.**
§122-540	**USE-SPECIFIC Outdoor cafes, restaurants, seating areas and beer gardens**	(a) All outdoor seating areas at grade level must be accessory to business which provides indoor seating or food concession. All storage, preparation and cooking of food and all vending machines shall be within an enclosed building or food concession. (b) The outdoor seating area shall be separated from all parking areas by means of a minimum three-foot high planting, wall, or other architectural feature delineating the space. (c) The outdoor seating area shall not be located within 50 feet of any properties zoned R1, MD, CN, CN-Mid, or CN-SF. (d) All outdoor areas shall be kept clean and void of litter at all times.	No outdoor seating	(a) Met (b) 6' privacy fence proposed (c) Met **(d) Applicant to note this requirement on the site plan.**

Items to be Addressed: Applicant to note the requirement "all outdoor areas shall be kept clean and void of litter at all times" on site plan.

BUILDING LOCATION AND SITE ARRANGEMENT §122-311(c)

"All elements of the site plan shall be harmoniously and efficiently organized in relation to the character of the proposed use, the size and type of lot, the size and type of buildings, and the character of the adjoining property. The site shall be so developed as not to impede the normal and orderly development or improvement of surrounding property for uses permitted in this chapter."

Building arrangement proposed to continue unchanged. Applicant proposes to extend westward an outdoor seating area/beer garden. As shown, beer garden has minimal accessible area for patrons with mobility disabilities; this is likely to be a challenge when obtaining Building Department approvals. Applicant also proposes extending the parking area westward, in gravel. Both the parking area and the outdoor seating area are set back 23' from the rear property line. The outdoor seating area is set back approximately 4' (varies slightly) from the south/side property line.

The dumpster is located in the street side yard. This is addressed later in this report.

Due to limited space on the north side of the building for parking, should the applicant wish to have parking, applicant may wish to consider relocating the outdoor seating area to the north of the building and the parking to the west.

Items to be Addressed: *None.*

SITE ACCESS, TRAFFIC, AND PARKING §122-311(d)

"With respect to vehicular and pedestrian circulation on the site, including walkways, interior drives, and parking; circulation shall to the extent possible create potential cross-and joint-access to adjacent parcels and the existing block layout. Special attention shall be given to the location, number and spacing of ingress and egress points; general interior circulation including turnaround areas; adequate provisions for delivery of services (trash removal, school buses, mail and parcel delivery); separation of pedestrian and vehicular traffic; avoidance of building corners next to access drives; identification of addresses; storage of plowed snow; and arrangement of parking areas that are safe and convenient, and insofar as practicable, do not detract from the design of the proposed buildings and structures, neighboring properties, pedestrian and bicyclist safety, access to transit and flow of traffic on adjacent streets. All buildings or groups of buildings shall be so arranged as to permit adequate access by emergency vehicles as required by the city building code."

Access to the site via car is currently done to the small paved parking to the north of the building, adjacent to the roll-up doors. There is bike parking available at the east end of the parking area. Foot traffic can approach from River or from Photo, as the area is highly walkable. However, there is no sidewalk on Photo nor on Ninde. Pedestrians from this direction must walk in the street. Photo generally has light traffic, with the vast majority going to/from the Sidetrack parking area to the north-east or to Cultivate. Note that both Ninde and Photo, while platted as streets, are quite narrow and more closely analogous to alleyways. Photo is less than 30' wide.

	ORDINANCE REFERENCE	REQUIRED	EXISTING CONDITIONS	PROPOSED
§122-685	**PARKING Dimensions**	• 9'x18' minimum, exceptions if adjacent to wall or overhang provided • May have 20% small car (8'x16', signed) • May have 10% motorcycle (5x8', signed)	One signed barrier-free space, approximately seven parking spaces.	**Undimensioned. Two barrier-free spaces are proposed near the building entrance; seven in the paved area. No count or dimensions given for parking in the graveled area.**
§122-683	**Access**	5' walkway from parking lot to parks, commercial, transit, walkways, institutions; raised/marked crosswalks within parking lot		Walkway marked towards south of parking area.
	Ingress & Egress	• Aligned across ROW, or offset by 25' • >50' from intersection • 20'-30' driveway		**Parking aisles have a unique configuration; they are end-on to Photo Street. This places them within 50' from the Ninde Intersection.**
	Internal Maneuvering	Each driveway providing access to an off-street parking lot containing five or more parking spaces shall be a minimum of ten feet in width. Where a turning radius is necessary, it shall be an arc that allows unobstructed vehicle flow.		Met

Surfacing	All parking and loading facilities and access drives shall be paved with a durable bonded material in accordance with accepted engineering standards, or alternative surfacing materials to minimize impervious surface and stormwater runoff, employ environmental and other best practices, and achieve low impact design, at the discretion of the City Engineer. Use of pervious alternative surfaces is encouraged in proximity to the Huron River and Paint Creek. Paving materials proposed to improve aesthetics may also be considered by the City Planner and the Planning Commission. Alternative surfaces proposed shall be reviewed by the City's consulting engineer.		See engineer's letter. Gravel surface is generally acceptable.
Drainage	All off-street parking and loading areas shall be graded and drained to public storm sewers. As an alternative, if in the opinion of the City's consulting engineer, the soils are of a type which will allow for efficient drainage, the use of drywells, infiltration trenches, swales, bio-retention or other best management practices for controlling urban runoff quality are permitted. No surface water shall be permitted to drain onto adjoining properties, unless there is a common engineered drainage system shared with the adjoining property or an appropriate watershed easement has been obtained. No surface water drainage from an off-street parking lot shall be permitted to drain across a public sidewalk.		See engineering review.

Setback from Street	Parking lot setbacks are designated by the zoning district in which they are located. An allowed exception are circular drives, which may be located in a required minimum front yard or street side yard, provided that such drives shall be designed so that no parking space is located closer than 25 feet to any street right-of-way line.		n/a.
Setback from Adjacent Lot	Parking areas are required to be 10' from any adjacent lot. Planning Commission may waive this requirement in whole or in part with a finding that the lot shares a common access and common parking with the adjoining lot, or that stormwater, landscaping, and other similar concerns have been adequately addressed with other methods.		Met.
Striping	For parking lots containing five or more spaces, all spaces shall be outlined with three-inch wide strips of white or yellow paint, except that barrier-free spaces shall be blue, with a symbol of compliance in blue, and signed in accordance with the State Barrier-Free Code.		Striping not possible in graveled lot. Striping in paved lot proposed to be in conformance.

Wheel Stops	For parking lots containing five or more spaces or accessory to commercial uses, wheel stops or curbing shall be provided for all parking spaces to prevent any vehicle from projecting beyond the parking lot area, bumping any wall or fence, or encroaching upon any landscaping. In all cases where parking lots abut public or private sidewalks, continuous concrete curbing or bumper stops, at least six inches high, shall be placed so that a motor vehicle cannot be driven or parked on, or hang over, any part of any sidewalk.		Wheelstops not provided in paved lot.
Lighting	With the exception of multiple-family dwellings on individual lots containing no more than four units, parking and loading facilities utilized during night-time hours shall be artificially illuminated. All such outdoor lighting shall meet the requirements of §122-609.		**No lighting proposed. Streetlights not shown on plan.**
Screening & Landscaping (internal)	1 tree per 8 spaces		**Two trees required.**
	1 landscape island for each 16 spaces		n/a
	Islands w trees: 9' wide min and 160' sf Islands w 5' min walkway: 11' wide min Islands: curbed or used for stormwater		n/a
	All aisle-ends & corners protected w curbed island		**Parking aisles unprotected in paved area.**
	3' between curb and planting (5' if vehicle overhang)		n/a
Screening & Landscaping (perimeter)	Screened in accordance with 703 if abutting R1, MD, CN, CN-Mid, CN-SF		n/a
	3'-4' screen 80% opacity where visible from ROW		**None provided from Photo.**

		Landscaped areas, walls, structures, walks- must be protected by curbing		Building walls and pedestrian walkway along building unprotected.
§122-691	**Motor spaces**			n/a
	Bicycle spaces	1 per 5 motor spaces, minimum of 2		n/a
§122-672	**SIDEWALKS**	provide a sidewalk or shared-use path This requirement may be modified by the Planning Commission as follows: (2) A fee in lieu of construction may be provided by the development in the amount of 100% of the construction cost, upon a finding that any portion of the perimeter of a lot is included in a transportation project programmed in the City's 5-year Capital Improvement Plan, or with a finding that sidewalk construction at this location is impractical due to lack of connectivity. Any fee paid for this purpose is reserved for non-motorized improvements as a part of the identified transportation project or for path and sidewalk construction throughout the City, respectively. (3) Any easement required for the construction, maintenance, or operation of a modified facility must be included on the site plan at the time the modification is requested.		**Construction of a sidewalk along Photo would primarily serve Cultivate's pedestrian traffic from their parking areas. There are, however, four single-family residences along Photo; one commercial building on Ninde, and two apartments on Ninde that may also benefit. Planning Commission may choose to consider a fee-in-lieu.**

§122-675 TRAFFIC VISIBILITY	Maintain shrubs/other obstructions lower than 30" and trees/other obstructions higher than 8': At driveway: within a 10'x10' triangle formed by the street ROW line and the edge of the driveway At intersection: within a 25' x 25' triangle formed by an extension of the property lines, as measured from the pavement edges.		**The dumpster placement is an extreme challenge to visibility for those exiting the gravel parking area.** **Applicant must apply for a variance or redesign the gravel parking area entrance.**

Items to be Addressed:

- No count or rough dimensions given for gravel parking area. Applicant to provide.
- Parking lot access is less than 50' from Ninde/Photo intersection. Applicant to revise.
- No lighting is shown on the plan. Applicant to show either site lighting or adequate street lighting.
- Two trees required.
- Parking aisles in paved area are unprotected by islands.
- Parking (both gravel and paved) is not screened from Photo.
- No sidewalk provided along Photo. Planning Commission waiver for fee-in-lieu requested.
- Dumpster is within the visibility triangle for the gravel parking. Applicant to revise entrance to gravel parking.
- Conflicting land use screening is required between the gravel parking and the residential use to the west.

ENGINEERING & STORMWATER §122-311(f), §122-311(g)

(6) Adequate services and utilities including sanitary sewers shall be available or provided, with sufficient capacity to properly serve the development. Appropriate measures will be taken to ensure that site drainage will not adversely affect adjoining properties or the capacity of the public storm drainage system, or nearby bodies of water. Provisions shall be made to accommodate stormwater and prevent soil erosion. All stormwater management facilities, including but not limited to storm sewers and detention/retention facilities, shall be designed in accordance with the "Rules of the Washtenaw County Water Resources Commissioner," together with any special provisions established by the city.
(7) Natural resources will be protected to the maximum feasible extent. The proposed development will not cause soil erosion or sedimentation problems, and will respect floodways or floodplains on or in the vicinity of the subject property.

See engineer's letter.

Items to be Addressed: None.

SCREENING §122-311(h)

"The site plan shall provide reasonable visual and sound privacy for all dwelling units on or adjacent to the property. Fences, walks, barriers, and landscaping shall be used, as appropriate, for protection and enhancement of the property. All outdoor storage of materials, loading and unloading areas, and refuse containers shall be screened or located so as not to be a nuisance. Outdoor lighting shall be shielded so as to not adversely affect neighboring properties or traffic on adjacent streets."

ORDINANCE REFERENCE	REQUIRED	EXISTING CONDITIONS	PROPOSED
§122-609 Lighting	• Dark Sky compliant; may be full cutoff where affecting residential uses • not >0.5 fc @ lot line • not >16'in height • not < 0.3 fc		**No lighting proposed. Show cut sheets and locations for all proposed site lighting.**
§122-608 Refuse Containers	Not located in the front yard or street side yard (waiver available) Maintained in a neat, orderly, and sanitary condition Adequate vehicle access must be provided masonry enclosure 1' taller than dumpster (no less than 6'), in rear yard, 80% opaque swing door	Dumpster in wooden enclosure	**Applicant shows a dumpster in the street side yard. Waiver requested as no other location with vehicular access is available, due to unique condition of Photo/Ninde.**
§122-631 Landscape plan			**None provided.**
§122-634 Screening Between Land Uses *if conflicting use*	visual buffer of at least 80% opacity and 6' height		Required between Cultivate and properties to south and west. **Gravel parking lot conflicts with residential use to west, screening must be provided.**
§122-636 Street Trees	1 tree per 30' of lineal frontage, centered between sidewalk and back of curb: 80'/30' = 6 trees		**River: 3 trees required. One tree present, with extensive canopy. Waiver of one tree requested; applicant to plant one additional tree.** **Photo: no street trees provided. Applicant requests a waiver.**

ORDINANCE REFERENCE	REQUIRED	EXISTING CONDITIONS	PROPOSED
§122-638 Site Landscaping	10%	None	met
§122-640 Exterior Electrical	Screen when visible from any primary visual exposure area	n/a	n/a
§122-632 Landscape Elements	Quality, composition, berms, spacing, species		No landscaping plan provided.
	Credit for existing vegetation		

Items to be Addressed:

- If outdoor lighting proposed, applicant to indicate on site plan and submit cut sheets.
- Waiver requested per 122-608(a) to allow placement of dumpster in street side yard, due to maneuverability challenges.
- Applicant to provide conflicting land use screening between gravel lot and property to west.
- Waiver from street tree requirement for one tree (of two) requested on River; waiver from street tree requirement on Photo for nine trees (of nine) requested.

OTHER DEPARTMENT AND AGENCY APPROVALS §122-311(j)

"Site plans shall conform to all applicable requirements of state and federal statutes, including health and pollution laws, fire or explosion hazards, toxic and hazardous materials, and barrier-free requirements. Site plan approval may be conditioned on the applicant receiving necessary county, state, or federal permits before a local building permit or occupancy permit is granted."

HISTORIC DISTRICT

All applicable Historic District reviews and approvals must be obtained.

DEPARTMENT OF PUBLIC SERVICES

The applicant is responsible for obtaining permits from the Department of Public Services before beginning work on any portion of the City right-of-way, including sidewalks, curbs, and driveways on Photo and River, as well as street tree plantings.

DISCUSSION

This site has several challenges due to the existing layout of the paved area, the building, and the relationship of each to Photo Street. It may be possible to reconfigure the proposed gravel lot to be angled parking, with an "in" at the current dumpster location and an "out" towards the west; the dumpster could be relocated southward towards the building as part of this reconfiguration. This may allow for off-street parking screening as well as the placement of some street trees. The aisled parking of the paved area as proposed is not an existing nonconformity, as parking prior was perpendicular from the building, but is an improvement over that condition as the vehicles are no longer backing directly into Photo Street. In the short term, it is possible that the site could work with some tweaks to the graveled area as discussed above and with the additional screening to the west. This, however, does not take full advantage of the site nor the building. Were the beer garden located to the north of the building, the overhead doors could be an asset in summer; the area immediately behind the building could be garden; and the bulk of the rear of the site could be parking. Due to the depth of the lot, it is likely that more parking than is currently available (even with the gravel lot) could be placed in the rear; this parking could be laid out with a more limited access to Photo Street, improving safety as well. Either the slight reconfiguration of the graveled lot or a complete overhaul of the site would bring the site into more conformance with the ordinance, improving traffic flows and compatibility with the neighborhood.

STAFF RECOMMENDATIONS: SITE PLAN

Staff recommends the Planning Commission *conditionally approve* the Site Plan for the Cultivate Coffee & Tap House with the following findings, waivers, and conditions:

Findings

1. The application substantially complies with §122-310.

Waivers

- Waiver requested per 122-608(a) to allow placement of dumpster in street side yard, due to maneuverability challenges.
- Waiver from street tree requirement for one tree (of two) requested on River; waiver from street tree requirement on Photo for nine trees (of nine) requested.
- Fee in lieu of provision of sidewalk along Photo is requested by the applicant.

Conditions

- If outdoor lighting proposed, applicant to indicate on site plan and submit cut sheets.
- Applicant to note the requirement "all outdoor areas shall be kept clean and void of litter at all times" on site plan.
- Applicant to address the following issues regarding the graveled parking area:
  - Lack of screening from Photo Street.
  - Lack of lighting. If on-site lighting is to be provided, please show in plan. If public street lighting is sufficient, please document.
  - Dumpster enclosure is within the visibility triangle of the parking lot entrance.
  - Conflicting land use screening is required between the parking area and the property to the west.
  - Provide approximate count of spaces proposed in gravel parking area.
  - Parking lot access is less than 50' from Ninde/Photo intersection. Applicant to revise.

Bonnie Wessler
City Planner, Community & Economic Development Department

CC File
Applicant

April 9, 2018

City of Ypsilanti Planning and Development Department
534 North Huron Street
Ypsilanti, Michigan 48197

Attention: Ms. Bonnie Wessler

Regarding: Cultivate Coffee & Tap House
Site Plan Review No. 1
OHM Job No. 0094-18-1030

Dear Ms. Wessler:

The applicant is requesting site plan approval for a proposal from the Cultivate Coffee & Tap House to make improvements to their existing site on North River Street and Photo Street in order to meet city standards. We have reviewed the plans dated February 22, 2018 for compliance with local ordinances and general engineering standards. At this time, we recommend site plan approval contingent on the following comments being addressed:

SITE PLAN REVIEW COMMENTS:

1. The applicant shall add "No Parking" signage to the north side of the existing gravel parking lot near the proposed guardrail.
2. Due to limited space behind the proposed dumpster location, it is recommended that bumper blocks be continued along the western edge of the dumpster enclosure to alleviate potential parking issues behind the enclosure.
3. The applicant shall provide clarification on the 10-inch stub that appears to terminate in front of the proposed dumpster pad location.

PRELIMINARY DETAILED ENGINEERING REVIEW COMMENTS:

4. The applicant shall provide grades for the handicap-accessible route from the parking lot to the building to ensure ADA compliance.

The applicant is advised that review and approval of detailed engineering plans is required prior to the start of construction.

If you have any questions, please contact me at (734) 522-6711.

Sincerely,
OHM Advisors

Jessica Katers, P.E.

Jessica Howard

OHM Advisors
34000 PLYMOUTH ROAD
LIVONIA, MICHIGAN 48150
T 734.522.6711
F 734.522.6427
OHM-Advisors.com

CC: Stan Kirton, Department of Public Works
Scott Westover, YCUA
File

P:\0000_0100\SITE_YpsilantiCity\2018\0094181030_Cultivate Coffee & Tap House\Site Review\Site #1\Cultivate_SP01.docx

CULTIVATE COFFEE & TAP HOUSE
SITE IMPROVEMENTS

307 N. RIVER STREET
YPSILANTI, MI 48198

OWNER/DEVELOPER
307 PROPERTY LLC | RYAN WALLACE
307 N RIVER ST
YPSILANTI, MI 48198
T: 616.502.3525

ARCHITECT
BOWERS + ASSOCIATES, INC.
2400 S. HURON PARKWAY
ANN ARBOR, MI 48104
T: 734.975.2400
F: 734.975.2410

CIVIL ENGINEER
NOWAK + FRAUS
46777 WOODWARD AVENUE
PONTIAC, MI 48342
T: 248.332.7931
F: 248.332.8257

PROJECT DESCRIPTION
SITE IMPROVEMENTS TO EXISTING PROPERTY
TO BRING UP TO CITY STANDARDS

SHEET INDEX

ARCHITECTURAL

T1.00	TITLE SHEET
SP1.00	SITE PLAN
SP2.00	SITE DETAILS

CIVIL

C1	BOUNDARY / TOPOGRAPHIC SURVEY
C2	PAVING / GRADING PLAN

ABBREVIATIONS:

ABV.	ABOVE
AFF	ABOVE FINISH FLOOR
ADJ.	ADJUSTABLE
AL.	ALUMINUM
ALUM.	ALUMINUM
ANOD.	ANODIZED
ANSI	AMERICAN NATIONAL STANDARDS INSTITUTE
APPROX.	APPROXIMATE
ARCH.	ARCHITECT
BD.	BOARD
BDRM	BEDROOM
B.F.	BARRIER FREE
BFF	BELOW FINISH FLOOR
BIT	BITUMINOUS
BLDG	BUILDING
BLKG	BLOCKING
B.O.	BOTTOM OF
BOTT.	BOTTOM
BTWN.	BETWEEN
CAB.	CABINET
CJ	CONTROL JOINT
CL.	CLOSET
CLOS.	CLOSET
CLG	CEILING
CMU	CONCRETE MASONRY UNIT
COL.	COLUMN
CONC.	CONCRETE
CONSTR.	CONSTRUCTION
CONT.	CONTINUOUS
CPT.	CARPET
C.T.	CERAMIC TILE
D.F.	DRINKING FOUNTAIN
DIA.	DIAMETER
DN.	DOWN
DPFG	DAMPPROOFING
DR.	DOOR
DS	DOWNSPOUT
DWG	DRAWING
EA.	EACH
EJ	EXPANSION JOINT
ELECT.	ELECTRICAL
ELEV.	ELEVATION
EQ.	EQUAL
E.W.	EACH WAY
E.W.C.	ELECTRIC WATER COOLER
EXP	EXPOSED
EX	EXISTING
EXT	EXTERIOR
FD	FLOOR DRAIN
FDN	FOUNDATION
FIN.	FINISH
FIXT.	FIXTURE
FLASH.	FLASHING
FLR.	FLOOR
FRP	FIBERGLASS REINFORCED PANEL
FRPFG	FIREPROOFING
FT.	FOOT, FEET
FTG.	FOOTING
GA	GAUGE
GALV	GALVANIZED
GB	GYPSUM BOARD
GFI	GROUND FAULT INTERRUPTER
GL.	GLASS, GLAZING
GYP.	GYPSUM
HD	HARDWOOD
HGT	HEIGHT
HM	HOLLOW METAL
HORIZ.	HORIZONTAL
H.P.	HIGH POINT
IN.	INCHES
INC.	INCLUDE, INCLUDING
INSUL	INSULATION, INSULATED
INT.	INTERIOR
ISOL.	ISOLATION
J.C.	JANITOR'S CLOSET
KIT	KITCHEN
L	LENGTH
LAV.	LAVATORY
LBS.	POUNDS
LLH	LONG LEG HORIZONTAL
LLV	LONG LEG VERTICAL
MANUF.	MANUFACTURER
MAR.	MARBLE
MAS.	MASONRY
MATL.	MATERIAL
MAX.	MAXIMUM

ABBREVIATIONS CONT.:

MECH.	MECHANICAL
MEMB.	MEMBRANE
MET.	METAL
MEZZ.	MEZZANINE
MFR.	MANUFACTURER
MIN.	MINIMUM
MISC.	MISCELLANEOUS
M.O.	MASONRY OPENING
MR	MOISTURE RESISTANT
MTD	MOUNTED
MTL	METAL
NATL	NATIONAL
N.I.C.	NOT IN CONTRACT
NO.	NUMBER
NTS	NOT TO SCALE
O.C.	ON CENTER
O.F.	OVERFLOW
OHDR	OVERHEAD DOOR
OPG	OPENING
OPP.	OPPOSITE
P.E.	PRE-ENGINEERED
PERIM	PERIMETER
PL	PLATE
P.LAM.	PLASTIC LAMINATE
PLYWD	PLYWOOD
P.P.T.	PRESERVATIVE PRESSURE TREATED
PR.	PAIR
PRE-ENG.	PRE-ENGINEERED
PREFAB	PREFABRICATED
PREFIN	PREFINISHED
PROJ.	PROJECT, PROJECTION
PROP.	PROPOSED/PROPERTY
PRTN	PARTITION
P	PAINT
PT	PORCELAIN TILE
QT	QUARRY TILE
R&S	ROD AND SHELF
R.C.	ROOF CONDUCTOR
R.D.	ROOF DRAIN
REFRIG.	REFRIGERATION, REFRIGERATOR
REINF.	REINFORCED
REINF'G	REINFORCING
REQ'D	REQUIRED
RET.	RETARDER
RF	RESILIENT FLOORING
RM.	ROOM
R.T.	RESILIENT TILE
RTNG	RETAINING
S.A.C.	SUSPENDED ACOUSTICAL CEILING
S.A.F.	SPRAY APPLIED FIREPROOFING
S.C.	SEALED CONCRETE
SCHED.	SCHEDULE
SCWD	SOLID CORE WOOD
SH	SHELF
SHW	SHOWER
SHT.	SHEET
SIM	SIMILAR
SPEC.	SPECIFICATION
SQ.	SQUARE
SS	STAINLESS STEEL
STD.	STANDARD
STL.	STEEL
ST. STL.	STAINLESS STEEL
STRUCT.	STRUCTURE
SUPP.	SUPPORT, SUPPORTED
SUSP.	SUSPENDED
SV.	SHEET VINYL
T&G	TONGUE AND GROOVE
TH.	THRESHOLD
TEL	TELEPHONE
THK	THICKNESS, THICK
T.O.	TOP OF
T.O.S.	TOP OF STEEL
TRANSF.	TRANSFORMER
TYP.	TYPICAL
UNO	UNLESS NOTED OTHERWISE
UR	URINAL
V.	VERTICAL
VB	VINYL BASE
VCT	VINYL COMPOSITE TILE
VERT.	VERTICAL
VWC	VINYL WALL COVERING
W.C.	WATER CLOSET
WD	WOOD
W.W.F.	WELDED WIRE FABRIC
W.W.M.	WELDED WIRE MESH

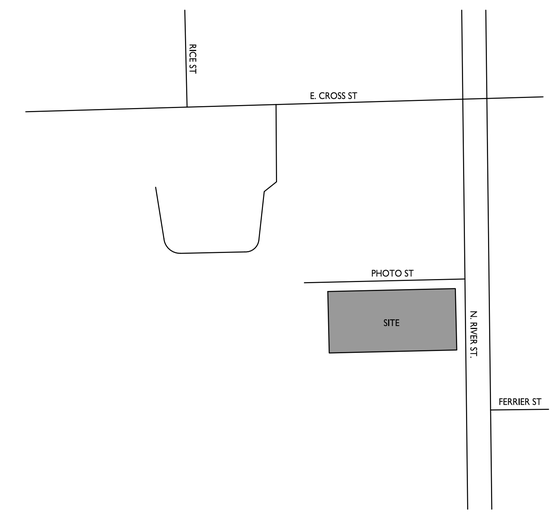

LOCATION MAP
NO SCALE

BOWERS+ASSOCIATES
ARCHITECTURE DESIGN
2400 SOUTH HURON PARKWAY + ANN ARBOR, MI 48104
P: 734.975.2400 + F: 734.975.2410
WWW.BOWERSNOW.COM

CONSULTANT + NAME

PROJECT + INFORMATION
CULTIVATE
COFFEE & TAP HOUSE
307 N RIVER ST
YPSILANTI, MI 48198

PROJECT + NUMBER
17-306

ISSUE + DATE

03 NOV 2017	
26 JAN 2018	OWN REV
12 MAR 2018	SITE

SHEET + TITLE
TITLE
SHEET
17306SP100.dwg

SHEET + NUMBER
T1.00

© Copyright 2017 Bowers + Associates, Inc.

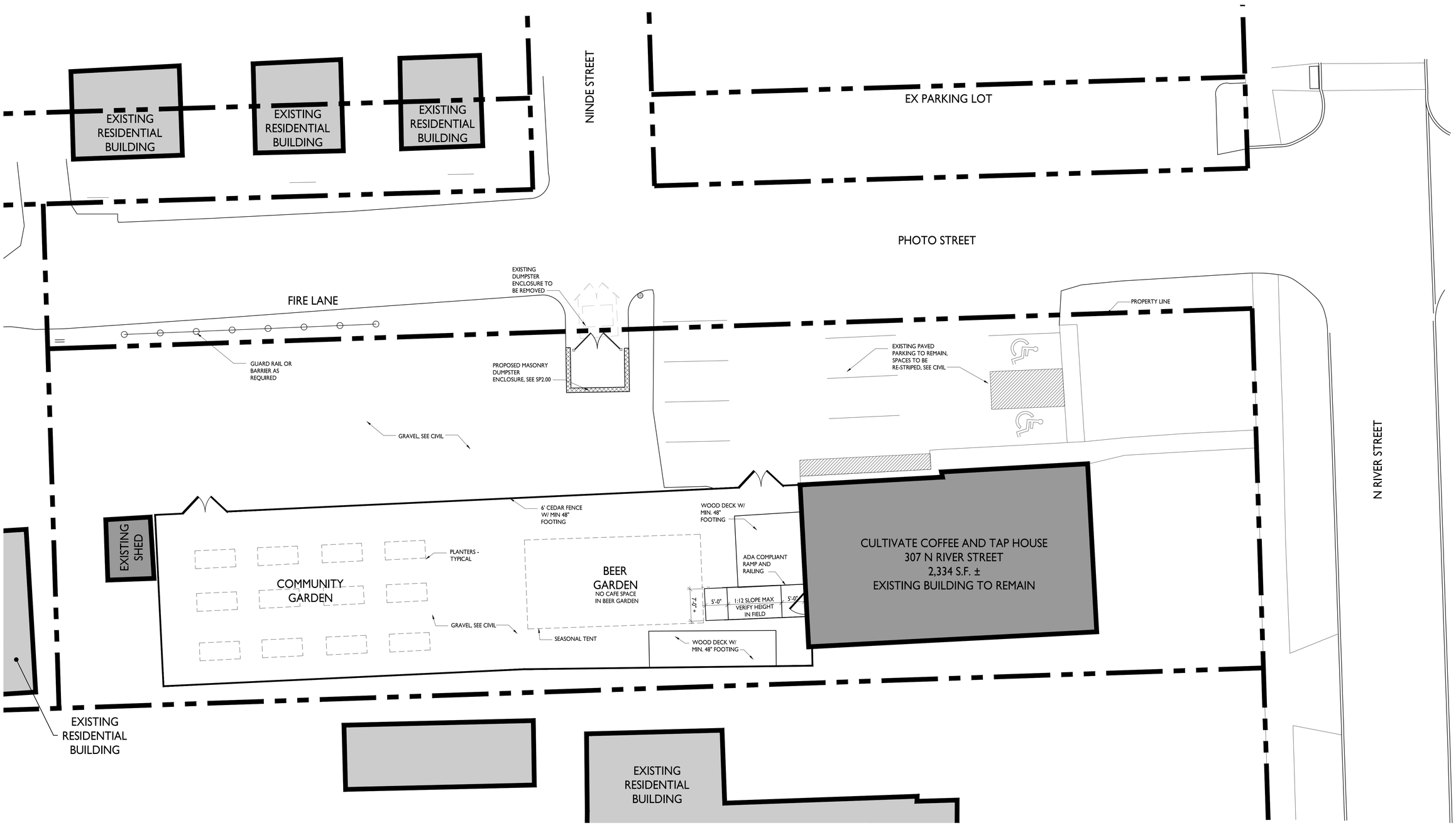

PRELIMINARY SITE PLAN
SCALE: 1" = 10'

BOWERS+ASSOCIATES
ARCHITECTURE DESIGN
2400 SOUTH HURON PARKWAY + ANN ARBOR, MI 48104
P: 734.975.2400 + F: 734.975.2410
WWW.BOWERSINCH.COM

CONSULTANT + NAME

PROJECT + INFORMATION
CULTIVATE
COFFEE & TAP HOUSE
307 N RIVER ST
YPSILANTI, MI 48198

PROJECT + NUMBER
17-306

ISSUE + DATE

23 AUG 2017	
03 NOV 2017	
26 JAN 2018	OWN REV
2 MAR 2018	OWN REV
12 MAR 2018	SITE

SHEET + TITLE
SITE PLAN
17306SP100.dwg

SHEET + NUMBER
SP1.00

© copyright 2017 Bowers + Associates, Inc.

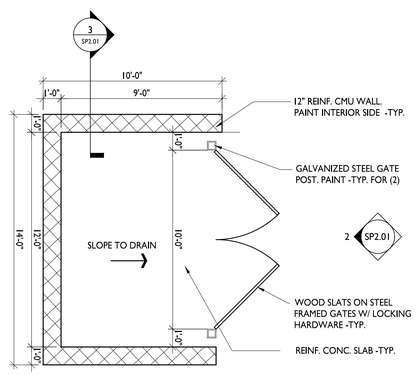

1 DUMPSTER PLAN
SP2.00 | SP1.00 SCALE: ¼" = 1'-0"

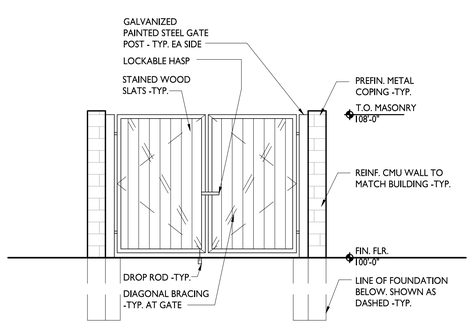

2 DUMPSTER ELEVATION
SP2.00 | SP1.00 SCALE: ¼" = 1'-0"

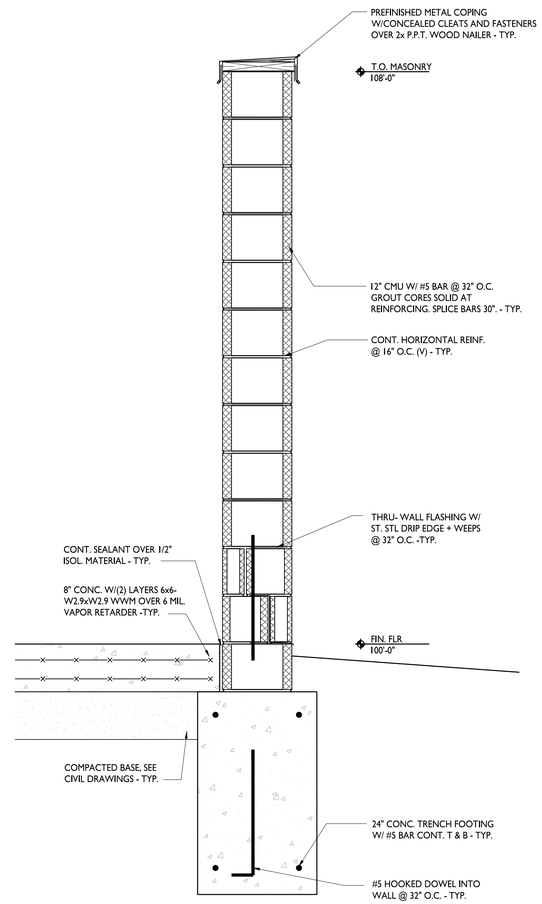

3 DUMPSTER SECTION
SP2.00 | SP1.00 SCALE: ¼" = 1'-0"

BOWERS+ASSOCIATES
ARCHITECTURE DESIGN
2400 SOUTH HURON PARKWAY + ANN ARBOR, MI 48104
P: 734.975.2400 + F: 734.975.2410
WWW.BOWERSINCH.COM

CONSULTANT + NAME

PROJECT + INFORMATION
CULTIVATE
COFFEE & TAP HOUSE
307 N RIVER ST
YPSILANTI, MI 48198

PROJECT + NUMBER
17-306

ISSUE + DATE

03 NOV 2017	
26 JAN 2018	OWN REV
2 MAR 2018	OWN REV
12 MAR 2018	SITE

SHEET + TITLE
SITE DETAILS
17306SP100.dwg

SHEET + NUMBER
SP2.00

© copyright 2017 Bowers + Associates, Inc.

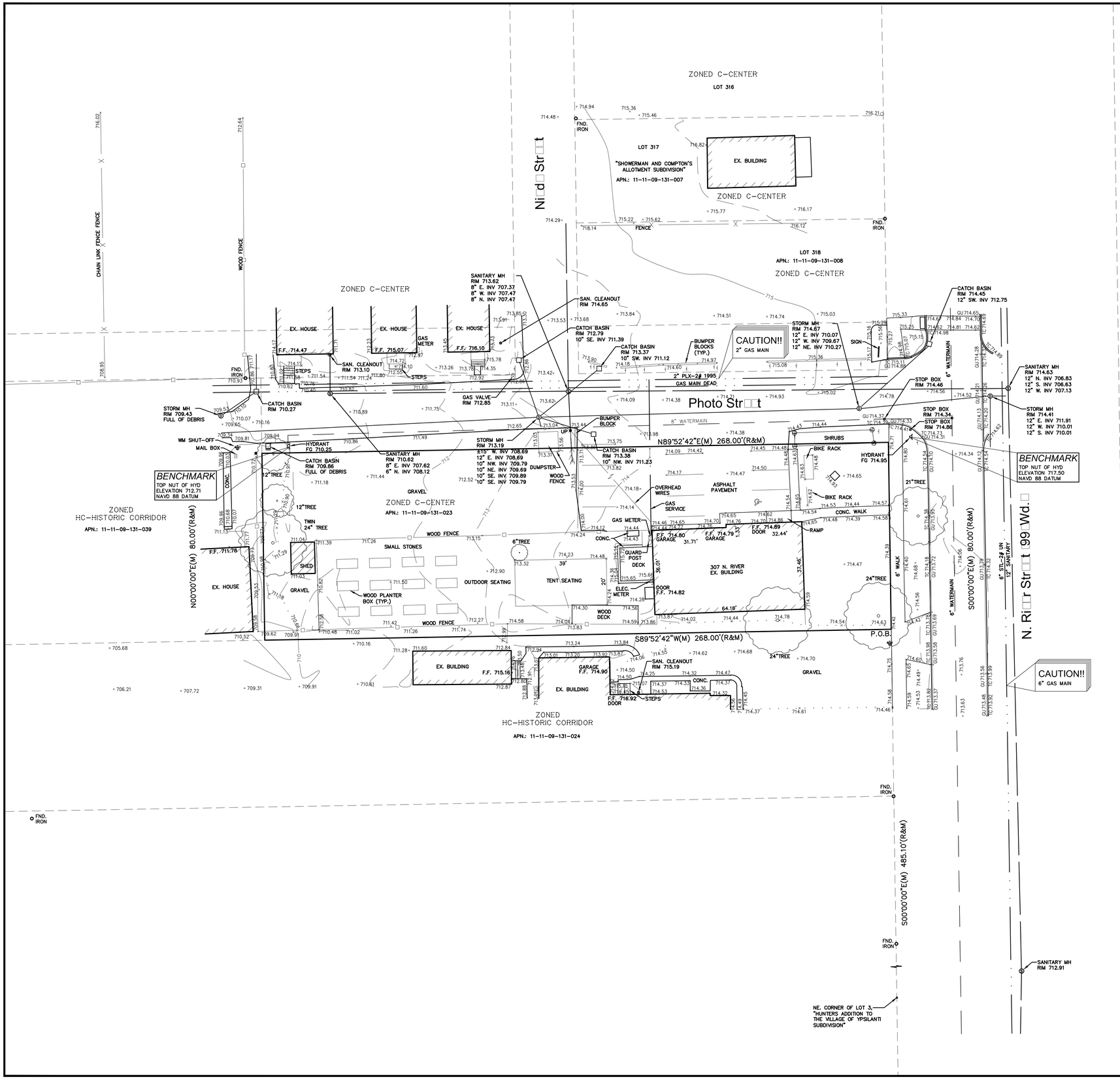

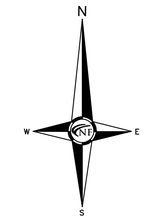

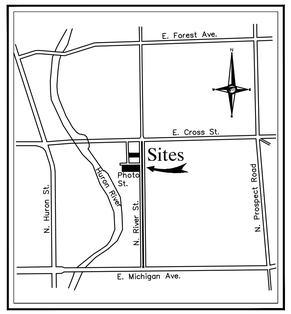

Location Map
N.T.S.

NF ENGINEERS
CIVIL ENGINEERS
LAND SURVEYORS
LAND PLANNERS

NOWAK & FRAUS ENGINEERS
46777 WOODWARD AVE.
PONTIAC, MI 48342-5032
TEL. (248) 332-7931
FAX. (248) 332-8257

SEAL

STATE OF MICHIGAN
KEVIN NAVAROLI
PROFESSIONAL SURVEYOR
No. 53503
LICENSED PROFESSIONAL SURVEYOR

PROJECT
Cultivate Coffee And
Tap House
307 N. River Street

CLIENT
307 Property, LLC
307 N. River Street
Ypsilanti, MI 48198
Contact: Ryan Wallace
Phone: (616) 502-3525

PROJECT LOCATION
Part of Frac. of Section 9
T.3S., R.7E.
Ypsilanti
Washtenaw County, Michigan

SHEET
Boundary / Topographic
Survey

811
Know what's below
Call before you dig.

REVISIONS
00-00-00

LE AL DESCRIPTION

PART OF FRAC. SECTION 9, T. 3 S., R. 7 E., YPSILANTI, WASHTENAW COUNTY, MICHIGAN, BEING DESCRIBED AS:COMMENCING AT THE INTERSECTION OF THE WEST LINE OF RIVER STREET (99.00 FEET WIDE) AND THE NE. CORNER OF LOT 3, "HUNTERS ADDITION TO THE VILLAGE OF YPSILANTI SUBDIVISION"; THENCE N. 00° 00' 00" E. 485.10 FEET; THENCE S. 89° 52' 42"W, 268.00 FEET; THENCE N. 00° 00' 00"E, 80.00 FEET; THENCE N. 89° 52' 42"E, 268.00 FEET; THENCE S. 00° 00' 00"E, 80.00 FEET TO THE POINT OF BEGINNING. CONTAINING 21,440 SQUARE FEET OR 0.492 ACRES.

PARCEL NO. 11-11-09-131-023
ADDRESS: 307 N. RIVER ST., YPSILANTI, MI 48198

MISS DI UTILITY DISCLAIMER NOTE

A MISS DIG TICKET NUMBER B73381457, PURSUANT TO MICHIGAN PUBLIC ACT 174 WAS ENTERED FOR THE SURVEYED PROPERTY. DUE TO THE EXTENDED REPORTING PERIOD FOR UNDERGROUND FACILITY OWNERS TO PROVIDE THEIR RECORDS, THE SURVEY MAY NOT REFLECT ALL THE UTILITIES AT THE TIME THE SURVEY WAS ISSUED ON 12-11-2017. THE SURVEY ONLY REFLECTS THOSE UTILITIES WHICH COULD BE OBSERVED BY THE SURVEYOR IN THE FIELD OR AS DEPICTED BY THE UTILITY COMPANY RECORDS FURNISH PRIOR TO THE DATE THIS SURVEY WAS ISSUED. THE CLIENT AND/OR THEIR AUTHORIZED AGENT SHALL VERIFY WITH THE FACILITY OWNERS AND/OR THEIR AUTHORIZED AGENTS, THE COMPLETENESS AND EXACTNESS OF THE UTILITIES LOCATION.

TOPO RAPHIC SURVEY NOTES

ALL ELEVATIONS ARE EXISTING ELEVATIONS, UNLESS OTHERWISE NOTED.

UTILITY LOCATIONS WERE OBTAINED FROM MUNICIPAL OFFICIALS AND RECORDS OF UTILITY COMPANIES, AND NO GUARANTEE CAN BE MADE TO THE COMPLETENESS, OR EXACTNESS OF LOCATION.

THIS SURVEY MAY NOT SHOW ALL EASEMENTS OF RECORD UNLESS AN UPDATED TITLE POLICY IS FURNISHED TO THE SURVEYOR BY THE OWNER.

LE END

- MANHOLE — EXISTING SANITARY SEWER
- HYDRANT — EXISTING SAN. CLEAN OUT
- GATE VALVE — EXISTING WATER MAIN
- MANHOLE, CATCH BASIN — EXISTING STORM SEWER
- EX. R.Y. CATCH BASIN
- EXISTING BURIED CABLES
- UTILITY POLE, GUY POLE, GUY WIRE — OVERHEAD LINES
- LIGHT POLE
- SIGN
- EXISTING GAS MAIN

DRAWN BY:
N. Naoum

DESIGNED BY:

APPROVED BY:
K. Navaroli

DATE:
02-22-2018

SCALE: 1" = 20'
20 10 0 10 20 30

NFE JOB NO. **K166**

SHEET NO. **1**

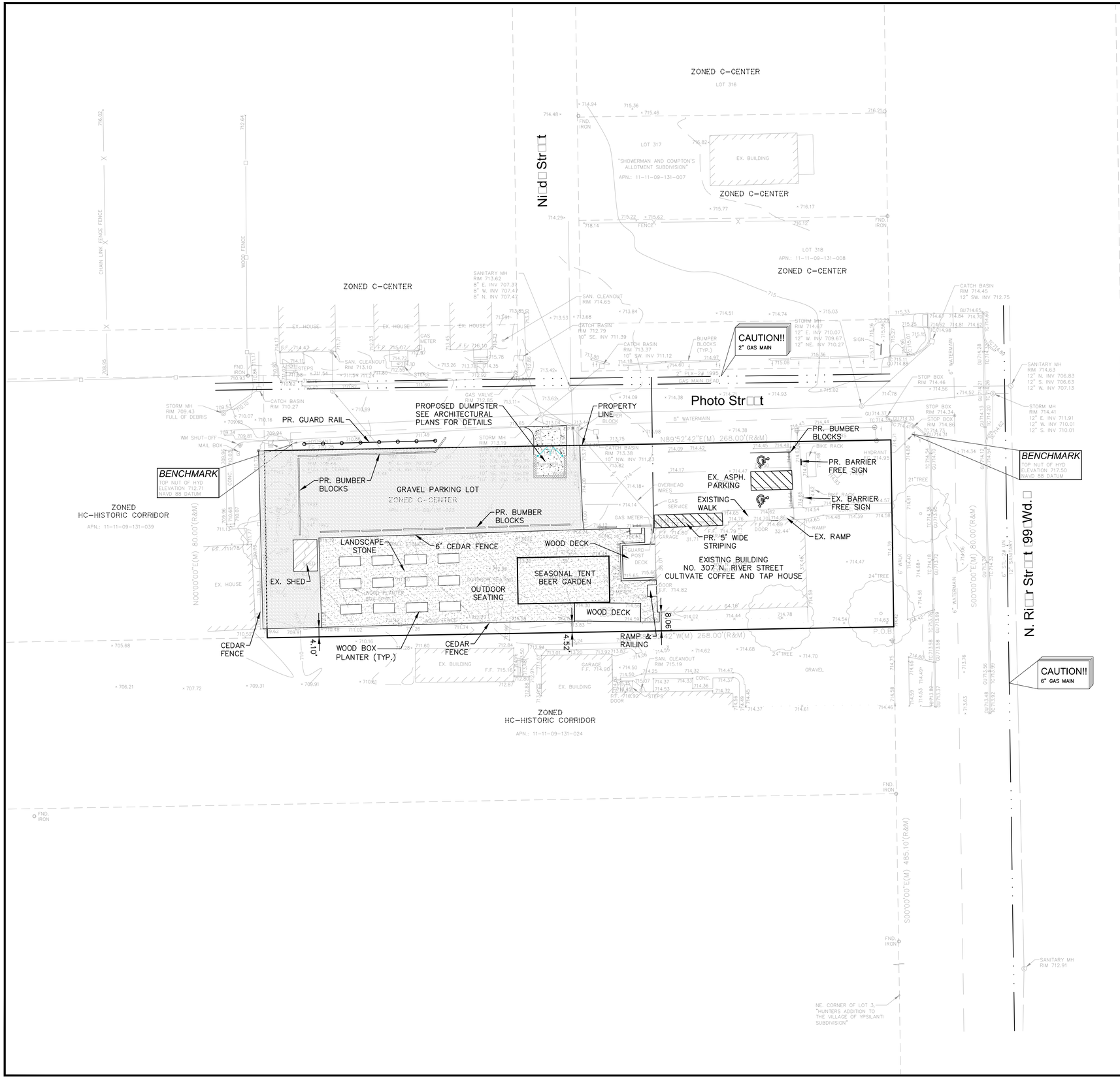

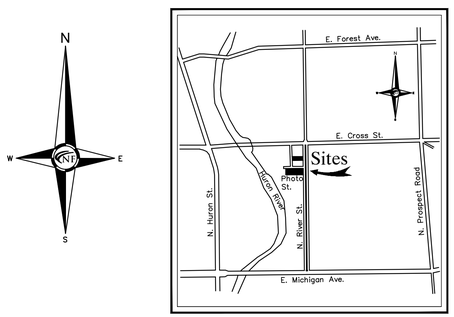

Location Map
N.T.S.

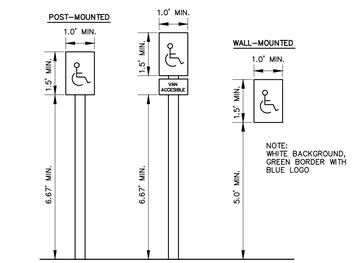

BARRIER FREE PARKIN SI NA E DETAIL
N.T.S.

PAVIN LE END

	PROPOSED CONCRETE PAVEMENT
	PROPOSED ASPHALT PAVEMENT

LE END

MANHOLE	EXISTING SANITARY SEWER
	SAN. CLEAN OUT
HYDRANT, GATE VALVE	EXISTING WATERMAIN
MANHOLE, CATCH BASIN	EXISTING STORM SEWER
	EX. R. Y. CATCH BASIN
UTILITY POLE, GUY POLE, GUY WIRE	EXISTING BURIED CABLES
	OVERHEAD LINES
	LIGHT POLE
	SIGN
	EXISTING GAS MAIN
C.O., MANHOLE	PR. SANITARY SEWER
HYDRANT, GATE VALVE	PR. WATER MAIN
INLET, C.B., MANHOLE	PR. STORM SEWER
	PR. R. Y. CATCH BASIN
	PROPOSED LIGHT POLE
TC 600.00	PR. TOP OF CURB ELEVATION
GU 600.00	PR. GUTTER ELEVATION
TW 600.00	PR. TOP OF WALK ELEVATION
TP 600.00	PR. TOP OF PVMT. ELEVATION
FG 600.00	FINISH GRADE ELEVATION

NF ENGINEERS
CIVIL ENGINEERS
LAND SURVEYORS
LAND PLANNERS

NOWAK & FRAUS ENGINEERS
46777 WOODWARD AVE.
PONTIAC, MI 48342-5032
TEL. (248) 332-7931
FAX. (248) 332-8257

SEAL

PROJECT
Cultivate Coffee And Tap House
307 N. River Street

CLIENT
307 Property, LLC
307 N. River Street
Ypsilanti, MI 48198
Contact: Ryan Wallace
Phone: (616) 502-3525

PROJECT LOCATION
Part of Frac. of Section 9
T.3S., R.7E.
Ypsilanti
Washtenaw County, Michigan

SHEET
Site Plan

811 Know what's below Call before you dig.

REVISIONS
00-00-00

DRAWN BY: N. Naoum
DESIGNED BY: N. Naoum
APPROVED BY: M. Peterson
DATE: 02-22-2018
SCALE: 1" = 20'

NFE JOB NO. K166
SHEET NO. 2

Bonnie Wessler

From: Mark Wright <MarkW@bowersarch.com>
Sent: Wednesday, July 11, 2018 4:43 PM
To: Bonnie Wessler
Cc: Ryan Wallace (ryan@cultivateypsi.org)
Subject: Cultivate
Attachments: 17306SP100-A.pdf; 17306SP100-B.pdf; 17306SP100-C.pdf

Bonnie,

I wanted to touch base with you in regards to the site plan revisions for Cultivate / 307 N River Street and our response to the city's review comments, in particular the ingress / egress issues with the Photo, Ninide intersection. I have attached 3 Preliminary site plans with different parking layouts.

Our preferred site plan would be Site Plan 'A' and is currently the one we plan to resubmit in which the gravel / dumpster access is aligned across from Ninide which would keep Cultivate traffic from having to travel down near the residential homes to enter the lot. It seems to align with the intent of Sec. 112-683 (b) (6) with Ninide's current use being closer to that of a public alley for the adjacent commercial properties.

Site Plan 'B' relocates proposed gravel drive 20' from the intersection per Sec. 112-683 (b) (7) This plan would be our proposed plan if the Planning Commission would allow our site to use the 20' offset for the proposed lot but not use layout 'A'

Site Plan 'C' is would create a new layout for the parking in the gravel and paved area to meet the 50' offset, however this would have all cultivate traffic driving down past the residential properties and seems to be the least desirable solution.

Can you advise me as to if we would require any separate applications whether for a variance or waiver in regards to aligning the drive or using the 20' offset so that we can include it with our resubmission or if you have any other comments that may be helpful to expedite finding a solution to this issue.

Thank You

MARK WRIGHT
ARCHITECTURAL ASSOCIATE
markw@bowersarch.com
T: 734.975.2400 x703

BOWERS+ ASSOCIATES
ARCHITECTURE DESIGN
2400 S. HURON PARKWAY + ANN ARBOR, MI 48104
T: 734.975.2400 + F: 734.975.2410

PARKING DATA

PARKING REQUIRED	0 SPACES
ACC. SPACES REQUIRED	1 SPACE W/ 5' ACCESS WAY
EXISTING PARKING TO REMAIN	8 SPACES 1 ACC. SPACE 9 TOTAL EXISTING
PROPOSED GRAVEL PARKING	9 SPACES
TOTAL SPACES TO BE PROVIDED	18 SPACES

LANDSCAPE DATA

6' EVERGREEN LANDSCAPE SCREENING TO BE PROVIDED ON WEST SIDE OF GRAVEL LOT

3' EVERGREEN LANDSCAPE SCREENING TO BE PROVIDED FROM PHOTO STREET TO GRAVEL LOT

3 STREET TREES REQUIRED
1 EXISTING STREET TREE TO REMAIN
1 PROPOSED STREET TREE
1 WAIVER REQUESTED FOR REMAINING REQUIRED TREE

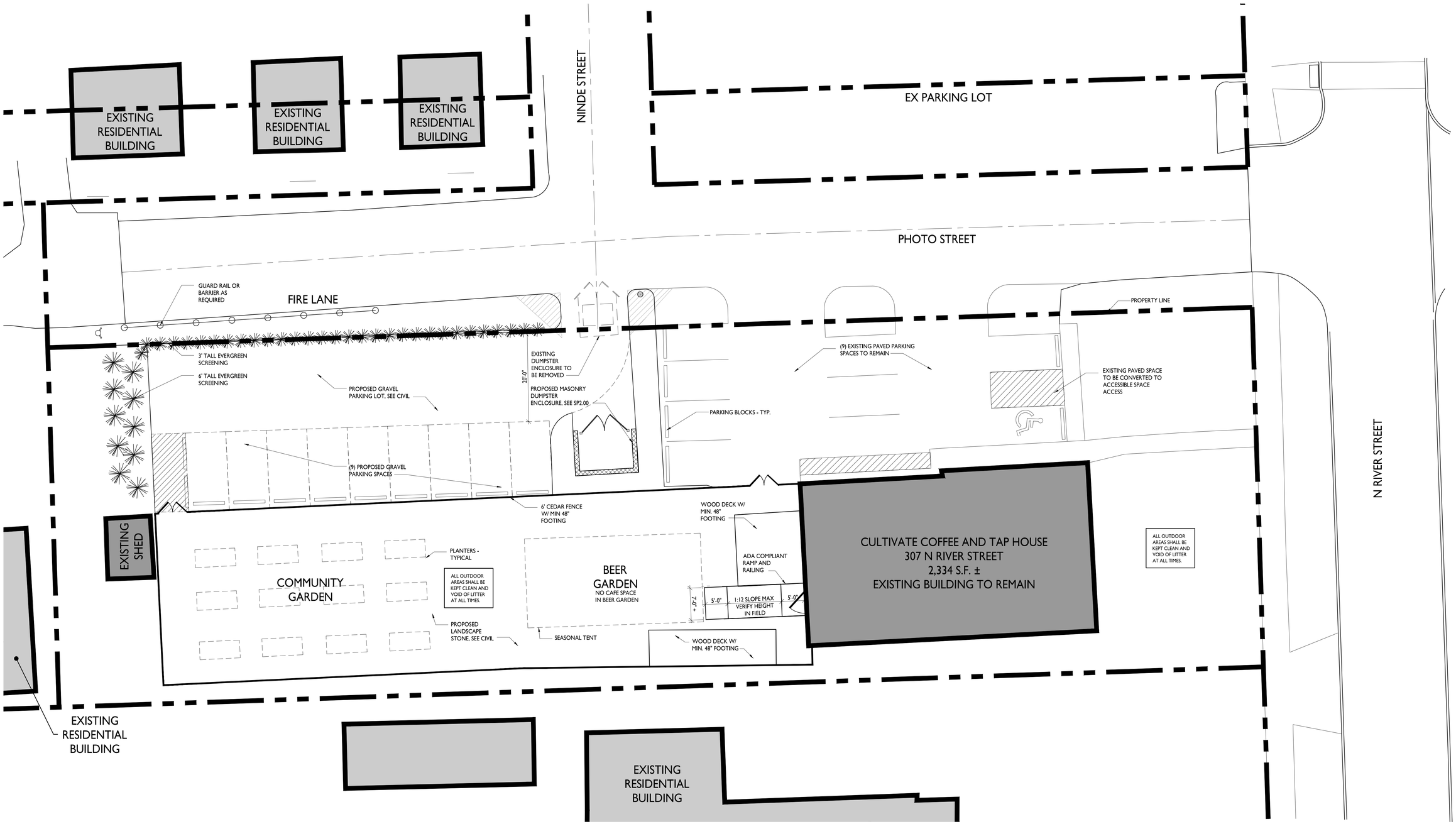

PRELIMINARY SITE PLAN
SCALE: 1" = 10'

BOWERS+ASSOCIATES
ARCHITECTURE DESIGN
2400 SOUTH HURON PARKWAY + ANN ARBOR, MI 48104
P: 734.975.2400 + F: 734.975.2410
WWW.BOWERSPLUS.COM

CONSULTANT + NAME

PROJECT + INFORMATION
CULTIVATE COFFEE & TAP HOUSE
307 N RIVER ST
YPSILANTI, MI 48198

PROJECT + NUMBER
17-306

ISSUE + DATE

23 AUG 2017	
03 NOV 2017	
26 JAN 2018	OWN REV
2 MAR 2018	OWN REV
12 MAR 2018	SITE
25 JUNE 2018	OWN. REV.

SHEET + TITLE
SITE PLAN
17306SP100.dwg

SHEET + NUMBER
SP1.00

© copyright 2017 Bowers + Associates, Inc.

PARKING DATA

PARKING REQUIRED	0 SPACES
ACC. SPACES REQUIRED	1 SPACE W/ 5' ACCESS WAY
EXISTING PARKING TO REMAIN	8 SPACES 1 ACC. SPACE 9 TOTAL EXISTING
PROPOSED GRAVEL PARKING	9 SPACES
TOTAL SPACES TO BE PROVIDED	18 SPACES

LANDSCAPE DATA

6' EVERGREEN LANDSCAPE SCREENING TO BE PROVIDED ON WEST SIDE OF GRAVEL LOT

3' EVERGREEN LANDSCAPE SCREENING TO BE PROVIDED FROM PHOTO STREET TO GRAVEL LOT

3 STREET TREES REQUIRED
1 EXISTING STREET TREE TO REMAIN
1 PROPOSED STREET TREE
1 WAIVER REQUESTED FOR REMAINING REQUIRED TREE

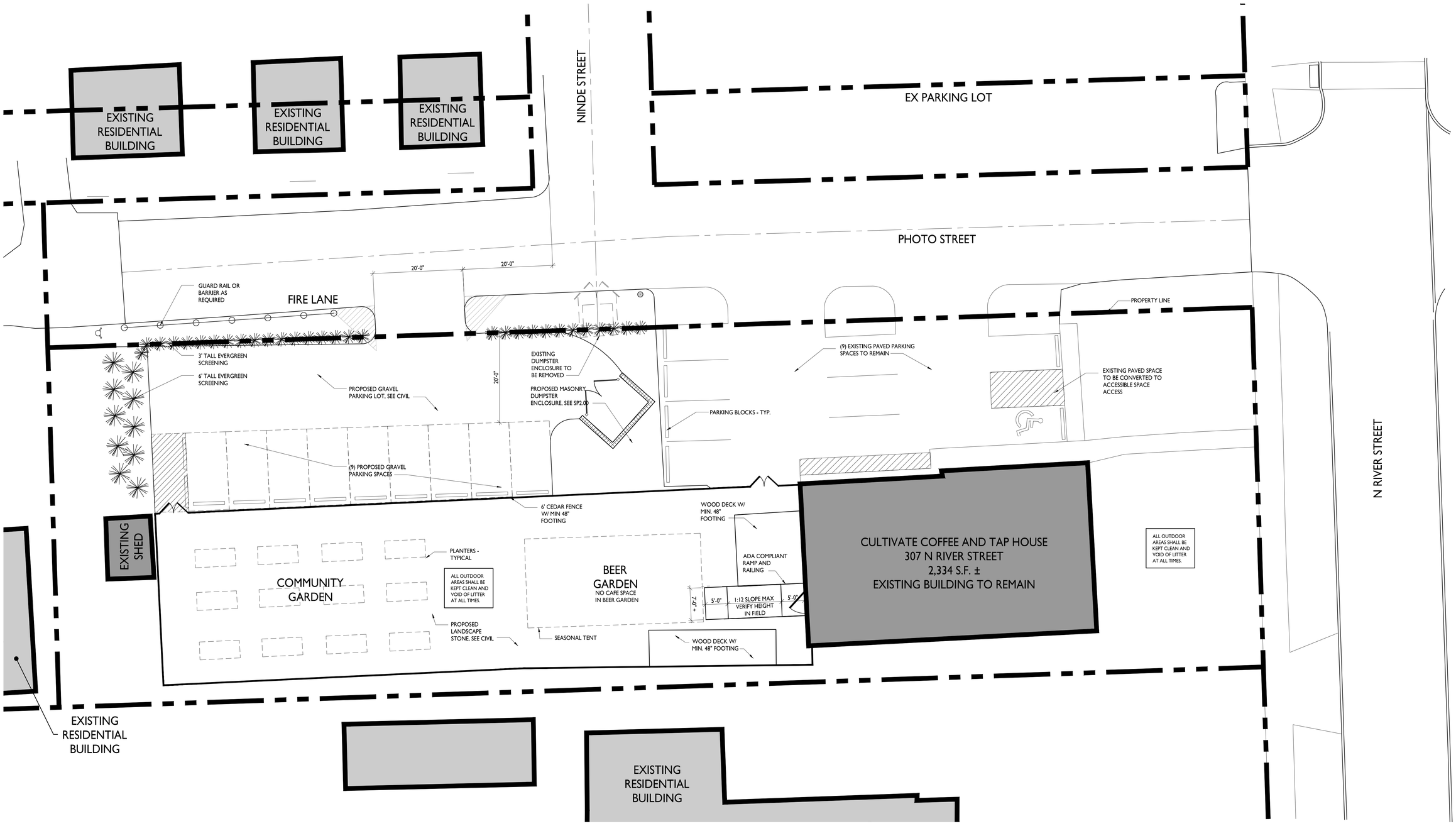

PRELIMINARY SITE PLAN
SCALE: 1" = 10'

BOWERS+ASSOCIATES
ARCHITECTURE DESIGN
2400 SOUTH HURON PARKWAY + ANN ARBOR, MI 48104
P: 734.975.2400 + F: 734.975.2410
WWW.BOWERSINCH.COM

CONSULTANT + NAME

PROJECT + INFORMATION
CULTIVATE
COFFEE & TAP HOUSE
307 N RIVER ST
YPSILANTI, MI 48198

PROJECT + NUMBER
17-306

ISSUE + DATE

23 AUG 2017	
03 NOV 2017	
26 JAN 2018	OWN REV
2 MAR 2018	OWN REV
12 MAR 2018	SITE
25 JUNE 2018	OWN. REV.

SHEET + TITLE
SITE PLAN
17306SP100c.dwg

SHEET + NUMBER
SP1.00

© copyright 2017 Bowers + Associates, inc.

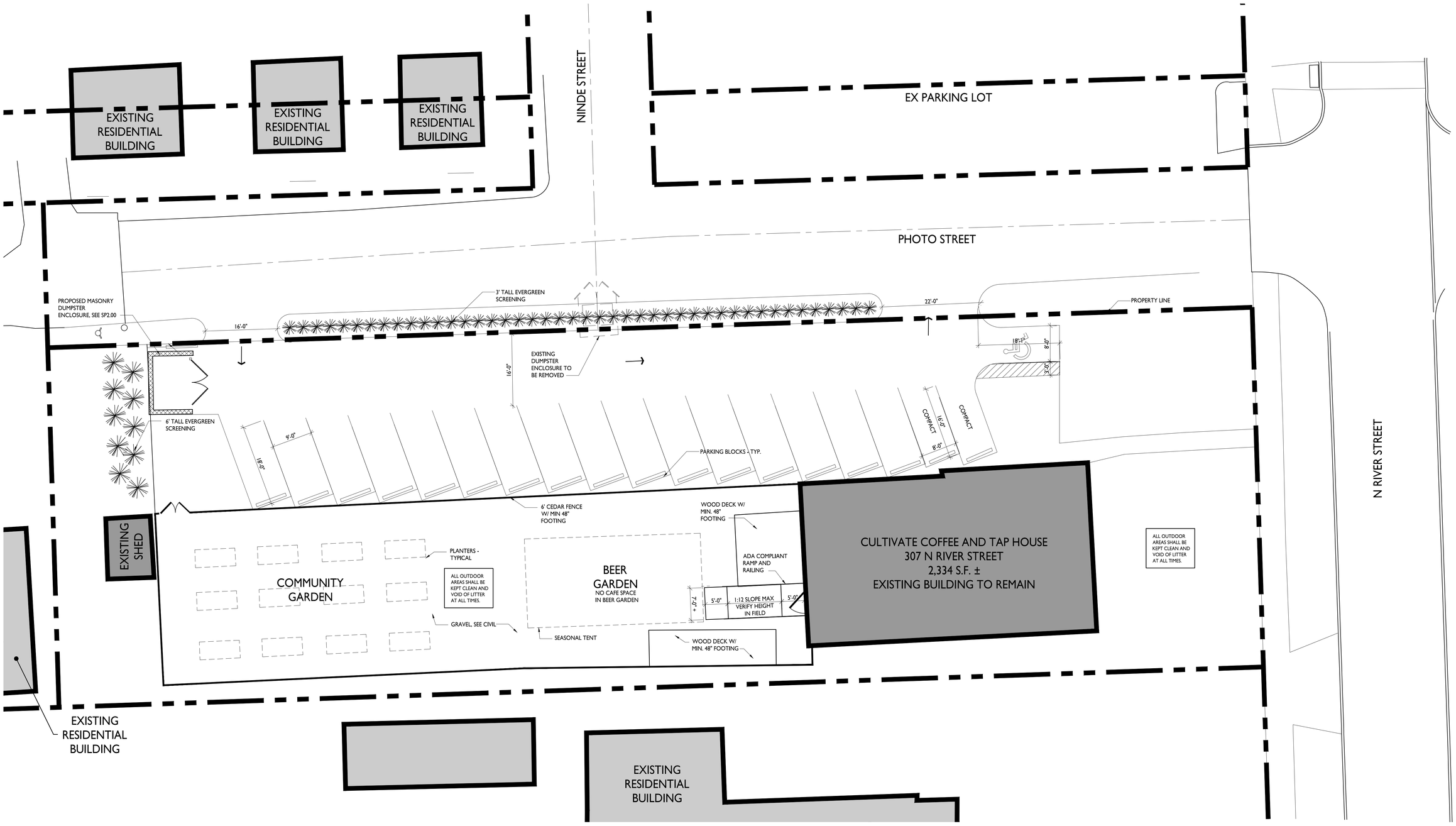

PRELIMINARY SITE PLAN
SCALE: 1" = 10'

BOWERS+ASSOCIATES
ARCHITECTURE DESIGN
2400 SOUTH HURON PARKWAY + ANN ARBOR, MI 48104
P: 734.975.2400 + F: 734.975.2410
WWW.BOWERSARCH.COM

CONSULTANT + NAME

PROJECT + INFORMATION
CULTIVATE COFFEE & TAP HOUSE
307 N RIVER ST
YPSILANTI, MI 48198

PROJECT + NUMBER
17-306

ISSUE + DATE

23 AUG 2017	
03 NOV 2017	
26 JAN 2018	OWN REV
2 MAR 2018	OWN REV
12 MAR 2018	SITE
25 JUNE 2018	OWN. REV.
8 JULY 2018	OWN. REV.

SHEET + TITLE
SITE PLAN
17306SP100b.dwg

SHEET + NUMBER
SP1.00

© copyright 2017 Bowers + Associates, Inc.

Resolution For Committee Member Appointment To The Non-Motorized Advisory Committee

Whereas, the bylaws of the Non-Motorized Advisory Committee, Section 1, article b, state…

> *"Committee members – The Committee Chairman shall select Committee members from City residents interested in serving on the Committee. Committee members will serve a two-year term of office, with Committee member appointments approved by the City of Ypsilanti Planning Commission. A Committee member's term starts on the date they are approved by the Planning Commission and expires on the last day of the month two years later", and*

Whereas, at its January 9, 2019 meeting the Non-Motorized Advisory Committee, the Committee Chair noted that Helen Schulte and Dylan Goings are both interested in serving on the Committee, and with no objection from Committee members, the Chair would recommend to the Planning Commission that they be appointed to the Committee.

Therefore Be It Resolved that the Non-Motorized Advisory Committee Chair recommends to the Planning Commission that Helen Schulte and Dylan Goings be appointed to the Committee for a two-year term of office.

Resolution For Committee Chair Recommendation For The Non-Motorized Advisory Committee Chair Position

Whereas, the bylaws of the Non-Motorized Advisory Committee, Section 1, article a, state…

> *"During January of every odd-numbered year, the Planning Commission shall appoint a Committee Chair, taking in account the recommendation of the Committee members, to serve a two-year term of office. In turn the newly appointed Committee Chair will select Committee Vice-Chair and Secretary to serve two-year terms of office",* and

Whereas, at its January 9, 2019 meeting the Non-Motorized Advisory Committee a motion was made, seconded and approved, to recommend that Bob Krzewinski be reappointed Chair of the Committee.

Therefore Be It Resolved that the members of the Non-Motorized Advisory Committee recommend to the Planning Commission that Bob Krzewinski be reappointed for a two-year term as Chair of the Committee

City of Ypsilanti

Community & Economic Development Department

Memo

To: Planning Commission

From: Bonnie Wessler, City Planner

Date: 11 January 2019

Subject: Combination Master Plan Update & Sustainability Plan Proposals

---

Planning Commission and the Sustainability Commission were sent three proposals for development of the Master Plan Update & Sustainability Plan. Staff invited questions from these bodies for staff to pass along to the agencies that submitted proposals. We will discuss those proposals at the 16 January meeting.

City Of Ypsilanti Non-Motorized Advisory Committee
2018 Annual Report

Introduction

The City of Ypsilanti Non-Motorized Advisory Committee was created out of a recommendation in the City Non-Motorized Plan and serves under the City Of Ypsilanti Planning Commission. The Committee was formed in September 2010.

The Statement of Purpose of the Committee is as follows… "The City of Ypsilanti Non-Motorized Advisory Committee, working through the Planning Commission, will work to enact recommendations of the City of Ypsilanti Non-Motorized Plan so as to offer residents increased non-motorized transportation and recreation options as well as having the Plan creating economic and quality of life incentives to the City".

Operations

The Committee met, with the exception of February, July and October, every month of 2018 at the Ypsilanti District Library, 229 West Michigan Avenue.

2018 members of the Committee through the year (some terms ended, others began) were as follows…

- Tony Bedogne (also a City Of Ypsilanti Planning Commission member – resigned in June due to moving out of the City of Ypsilanti)
- Martha Cleary (Resigned due to family obligations in June)
- Bob Krzewinski
- Jared Talaga (also a City Of Ypsilanti Planning Commission member)
- Sarah Walsh

Non-Motorized Advisory Committee 2018 Actions

During 2018 the Committee actively worked to complete many of the goals of the Non-Motorized Plan, as listed below.

- Public Input – The Committee's meetings always start with a public input session on the City's Non-Motorized Plan and the work of the Committee. The Committee also maintains a Facebook page offering an opportunity for additional public input.

- Publicity/Outreach – Committee meetings are publicized though an official City notice by the City Clerks office as well as announcements over the Committee's Facebook page as well as through other email/Facebook pages (i.e. Bike Ypsi, Bike-Bus-Walk Ypsilanti, etc.). The Committee had a table at the annual Parkridge Festival (8/25/18) where safe bicycling and walking information was distributed and 50 bicycle helmets were given away free courtesy of a grant from the Ann Arbor Bicycle Touring Society (www.aabts.org). The Committee also had a table at the downtown Halloween Festival (10/26) where lighted wristbands were distributed (courtesy of the AAATA) and safe trick-or-treating handouts were distributed. The Committee also continues to work with the County-wide advocacy group, the Washtenaw Bicycling and Walking Coalition (www.wbwc.org).

- City Meetings – Members of the Committee met, or had telephone conversations, with Planning Department staff prior to most Committee meetings for input and updates. Also, Committee members attended numerous City Council and Planning Commission meetings throughout 2018 to support non-motorized projects.

- Committee Priorities – Every October and November, the Committee reviews possible priorities for the coming calendar year and finalizing the list at its December meeting. The Committee priorities are then forwarded to the Planning Department and City Council.

- Snow Removal – In the winter months the Committee mounted a campaign to educate area residents, thorough social media and its Facebook page, about the need to shovel sidewalks as required by City ordinance and how to report problems using ClickFix – Ypsi Connect. The Committee timed media actions to that of just prior to major snowfalls with information sent to all City neighborhood groups on Facebook and NextDoor.

- City Non-Motorized Plan – The Committee is working with the Planning Department to update the City's Non-Motorized Plan and expects the process to be complete in 2019.

- Border To Border Trail – During 2018, the Washtenaw County Parks & Recreation Commission (WCP&RC), the main governmental body behind the Border To Border (B2B) Trail, continued work on an Eastern Washtenaw County (i.e. east of US 23) B2B Trail Master Plan. A working group was established with members that included staff from the City Economic Development Department, City Planning Department and City Non-Motorized Advisory Committee Bob Krzewinski, sitting on the working group as the Chair of the Friends of the Border To Border Trail.

- Bike Friendly Community & Walk Friendly Community status – The City officially became a League of American Cyclists "Bike Friendly Community "at the Bronze level in late 2017 with the award being for a four-year period. In January 2018 the Washtenaw Bicycling & Walking Coalition awarded a grant to purchase five BFC signs that were installed at City "gateway" locations by the City Public Services Department. On the Walk Friendly Community status, the City was received a "honorable mention" standing with the report card for the award noted that to obtain full Walk Friendly status, items such as an ADA Transition Plan, a Safe Routes To School program, Open Street (closing down a street for short periods for pedestrians) events, improved pedestrian crossing signals, pedestrian counts and law enforcement cooperation need to be addressed. The Committee plans to resubmit the Walk Friendly Community once the Non-Motorized Plan is updated.

- City Council Budget – Committee members attended the annual City Council budget meetings providing non-motorized project recommendations to Council.

- Bike Friendly Business program – The Committee, with the support of the Downtown Association of Ypsilanti, continued to sign up participants for a local Bike Friendly Business (BFB) program as a way to promote active and healthy lifestyles for employees and customers in the Ypsilanti area. The campaign will honor corporations, organizations, associations, government agencies or non-profit groups located in Ypsilanti that actively promotes bicycling for transportation, recreation, exercise and sport. Business participants receive a BFB window sticker and are listed on the Bike-Bus-Walk Ypsi (www.bbwypsi.org) web site.

- Bike Lanes –In 2018 the Committee also started researching areas where additional bike lanes would be used in the City, with the top two locations being West Cross Street (west of Wallace) and Harriet/Spring/Factory/Maus Streets. In March 2018 the Committee forwarded a resolution to the Planning Commission noting that "the lack of a center turn lane on Cross Street at the intersection of Mansfield Street is a real safety factor" and urging that "as part of a West Cross Street repaving project, a two-lane, plus center turn lane, configuration going as far west as practical that would include bicycle lanes on both sides of the road as well as vehicle parking on the south side of West Cross Street."

- ReImagine Washtenaw – At the April 2018 Committee meeting, Nathan Voght, ReImagine Washtenaw Project Manager, gave an overview and update on the ReImagine Washtenaw project along with the challenges that are faced. Committee members assisted the County Office of Community & Economic Development in performing pedestrian counts on Washtenaw Avenue in April to be used for potential mid-block pedestrian crossings.

- Three-Foot Passing Law – The Committee placed basic information on the Committee Facebook page about the Michigan 3-foot bicycle passing law taking effect the end of September and shared with a few area discussion groups. A more thorough educational effort on the 3-foot law is planned for the spring of 2019.

- Bike repair Station – The Committee worked with the Friends of the Border To Border (B2B) Trail to obtain and have installed a bike repair station (containing a work stand, tools and an air pump), as well as a donated bike parking loop, on the south plaza of the non-motorized bridge over the Huron River just east of downtown. It should be noted the bike repair station came from a grant that the Friends of the B2B Trail received from the REI Co-Op and the bike parking stand was a donation from the Friends.

- I-94/Huron – Hamilton Streets Non-Motorized Projects - The Committee continued to follow these items closely as there are a fair number of pedestrians and bicyclists using Huron Street over I-94 with no dedicated non-motorized facilities.

- Bike Bus-Walk Week (May 13-19) – With the intent to have individuals try alternative transit in the hope that such modes of transportation would become a habit, the Committee coordinated events during this week (also known as national Bike To Work Week). Events during this week included a Border To Border Trail bicycle ride (sponsored by the Friends of the Border To Border Trail – www.bordertoborder.org), and a "Ride Of Silence" (sponsored by the Ann Arbor Bicycle Touring Society and the Ypsilanti- headquartered Program To Educate All Cyclists) starting from Recreation Park to memorialize cyclists injured or killed and urging motorists and cyclists show respect for each other. The Friday of Bike-Bus-Walk Week is also known nationally at Bike To Work Day and a bike commuting station was set up that morning at Beezy's Café by the Committee offering free bike maps, literature, coffee snacks, etc.

Ypsilanti Non-Motorized Advisory Committee Meeting Minutes
Wednesday, January 9, 2019

1. Call to order - The meeting was called to order at 7:10pm at Biggby's Coffee, 1510 Washtenaw Avenue, Ypsilanti. Committee members attending was Sarah Walsh, Jared Talaga and Bob Krzewinski. Also attending was Mayor Beth Bashert, Helen Schulte and Dylan Goings.
2. Introductions - Audience participation - Public input – A discussion was held with Mayor Bashert with the following notations...
    - A meeting will be set up with the Mayor, Planning Commission Chair and Vice-Chair, and Non-Motorized Advisory Commission Chair, to discuss making sure that non-motorized projects have proper input by respective City entities as well as making more transparent non-motorized funds and disbursements.
    - The Mayor and Committee will work together on media work dealing with safe bicycling education in the spring and sidewalk snow removal in the late fall.
    - Revisiting curb cut priorities and taking in input from the area's disabled community, possibly through public input sessions.
    - Promoting greater communications though possibly starting regular "Walk & Talk With The Mayor" walks as well as "wheelchair tours" (possibly done in conjunction with the Ypsilanti-based Program To Educate All Cyclists – PEAC) to give able-bodied people a chance to experience problems that wheelchair users encounter.
3. General business
    a. Agenda approval – A motion was made by Sarah, seconded by Jared to approve the agenda, passing unanimously.
    b. Approval of December meeting minutes – A motion was made by Sarah, seconded by Bob, to approve the December meeting minutes passing unanimously.
    c. Committee Bylaws – Committee Chair recommendation to Planning Commission – With no other Committee members interested in the position, a motion was made by Sarah, seconded by Jared, to recommend to the Planning Commission that Bob be reappointed to another two-year term as Committee Chair, passing unanimously. Bob will forward the action to the Planning Commission for action.
    d. Additional Committee member recruitment – Bob will provide the Mayor with a news items for the Mayors Newsletter asking for volunteers to serve on the Committee.
    e. Other – Bylaws – Sarah will document possible revisions to the Committee bylaws by the next Committee meeting.
4. Old & continuing business
    a. 2019 Committee priorities
        1. City Non-Motorized Plan – Jared will be working on the latest draft Plan revision over the next few weeks.
        2. Sidewalk curb cut inventory & improvements – City Planner Bonnie Wessler noted that there is a curb cut inventory already completed and Jared will work on a program where area residents

can document where existing curb cuts are deficient or locations where new curb cuts are very much needed.

3. Pedestrian Improvements – For the upcoming City budget revisions, the Commission urges that the City again consider establishing traffic calming procedures (such as speed bumps) and purchase permanent (i.e. solar powered) radar speed signs at select locations (i.e. southbound Prospect Road at Holmes, westbound Cross Street approaching Depot Town).
4. Bike Lanes – In talking with City staff, it is the Committee's understanding that the West Cross Street repaving will include a road diet taking bike lanes further west beyond the Mansfield Street intersection. Harriet/Spring/Factory/Maus
5. Communication – Future Committee meeting invitations will include City Council members.
6. Non-Motorized City budget – Discussed earlier in the meeting with the Mayor. Also, Bob will forward a City budget timeline to Committee members.
7. Bike Boulevards – Discussion held on the concept of encouraging pedestrians and bicyclists to use quieter streets that can be improved for such use with low-cost resources. Also, a more fitting name may be "People Friendly Streets".
8. Border To Border Trail – Word is expected to begin in 2019 for improvements to Frog Island, Riverside Park and Grove Road.
9. Walk Friendly Community application – Expected to be sent in once the City Non-Motorized Plan update is completed.
10. Sidewalk/Curb Cut snow removal promotion – Once a significant snow event takes place, Bob will send out a notice to area residents using Facebook and NextDoor social media reminding residents of sidewalk snow removal laws.
11. Events – A Border To Border (B2B) Trail walk was held by the Friends of the B2B Trail on New Year's Day with nearly 30 people showing. Bob is still planning on having a cold weather cycling talk this winter. Bike helmet grants will be researched for the August Parkridge Festival where the Committee traditionally has a table.
12. Dockless bicycle/scooter policy by City – A City hearing notice was posted, then withdrawn, on a City scooter policy. The Committee sees a real need for the City to adopt some type of ordinance regarding electric bikes/scooters and Dylan Goings will research "best practices" ordinances other cities have enacted.

b. Committee Annual Report – A motion was made by Jared, seconded by Sarah, to approve the draft 2018 Annual Report, passing unanimously. Bob will forward the document to the Planning Commission.
c. Other – Jared has given "winter wheelchairing" talks and will forward data to Bob for Committee publication to area residents.

5. New Business
   a. Planning Department update
   b. Other
      - New Committee Members – Both Helen Schulte and Dylan Goings indicated they are willing to serve on the Committee. With no objections from Committee members, their names will be submitted to the Planning Commission for approval to serve.

- Joint Meetings discussion was held on possible joint meetings of the Non-Motorized Advisory Committee and the Parks & Recreation Commission, or Committee/Commission members sitting in on each other's meetings.

6. Other Items – Announcements – Next meeting – No announcements. For the next meeting Bob will be out of town for a number of weeks in January and February so no February meeting will be held.
7. Adjournment – A motion was made by Sarah, seconded by Jared, to adjourn the meeting. The motion was approved unanimously, and the meeting was adjourned at 8:46pm. The next meeting will be Thursday, March 7, 7pm at the downtown Library

Agenda
Planning Commission
Wednesday, 16 January 2019 – 7:00 P.M.
City Hall – Council Chambers, 1 S Huron St
Ypsilanti, MI 48197

I. Call to Order

II. Roll Call

Matt Dunwoodie, Chair	P	A
Jared Talaga, Vice-Chair	P	A
Toi Dennis	P	A
Jessica Donnelly	P	A
Phil Hollifield	P	A
Heidi Jugenitz	P	A
Jelani McGadney	P	A
Michael Simmons	P	A

III. Approval of Minutes

- December 19, 2018

IV. Audience Participation

Open for general public comment to Planning Commission on items for which a public hearing is not scheduled. Please limit to five minutes.

V. Presentations and Public Hearing Items

- Capital Improvements Review: 2019 Pavement Maintenance Program
  Presentation
- Medical Marijuana Provisioning Centers: Increase in Buffer
  Public Hearing: Text Amendment
  Tabled from 3/21/2018
- Commercial Sales and Commercial Recreational Use of Firearms
  Public Hearing: Text Amendment
- Miscellaneous text updates including parking, setbacks, nonconforming A, and corrections
  Public Hearing: Text Amendment

VI. Old Business

- 307 N River: Site plan review
  Tabled from 7/18/2018 – to remain on table pending ZBA action

VII. New Business

- Appointment of Members for the Non-Motorized Transportation Committee
- Appointment of Officers for the Non-Motorized Transportation Committee
- Master Plan Update/Sustainability Plan Proposal discussion

VIII. Future Business Discussion / Updates

IX. Committee Reports

- Non-motorized Committee Report (minutes, annual report)
- Master Plan: Housing Affordability and Access subcommittee report

X. Adjournment

PLANNING COMMISSION
MEETING MINUTES
December 19, 2018
CITY COUNCIL CHAMBERS
7:00 P.M.

I. CALL TO ORDER

The meeting was called to order at 7:05 p.m.

II. ROLL CALL

Present: M. Dunwoodie, J. Donnelly, P. Hollifield, J. McGadney
M. Simmons, J. Talaga

Absent: T. Dennis, H. Jugenitz (excused)

Staff: Bonnie Wessler, City Planner
Joe Meyers, EDC Director

III. APPROVAL OF MINUTES

Commissioner P. Hollifield moved to approve the minutes of November 14, 2018 (Support: J. Talaga) and the motion carried unanimously.

IV. AUDIENCE PARTICIPATION

Nathanael Romero, Ward 1 – support kiosks – great for city – social media a powerful tool to get information out there. He is a member of the sub-committee on Housing and feels it would be great if we could publicly advertise on kiosks. Great for free-lancers, musicians, etc.

Brian Geringer, 415 Pearl – supports lifting ban on public flyering until certain amount of kiosks are built. He feels this is a Human Rights issue – lack of ability for musicians to be able to post their information giving access to the public and level the playing field.

Christina Glulia, **lives in Ward 1** – strongly supports public kiosks. Understands the problem with litter on light poles, etc and is a nuisance people not taking them down, but there is nowhere for people to go to know about events. The city has lost all the press and need to be able to inform people about events. She is a member of the Music and Arts Guild and feels we need a place to be able to let the public know of community events, etc. She strongly supports kiosks.

Kyle Hunter, 430 S. Adams – Supports kiosks. He stated that he had put information on light poles and as he was doing it, one of the city officials was right behind him removing them so he agrees that kiosks would be a great addition because of the in ability of places for residents to post their information. He recommends a temporary stay on the ban on putting

stuff on light posts until we come up with an agreement on kiosks giving local artists an opportunity to promote themselves. Also supportive of people being able to post things on vacant buildings.

Amber Fellows, Ward 3 – Vice Chair of the Human Relations Commission, in attendance on their behalf. She passed out two documents which she planned to discuss – the ordinance and the resolution. She stated this all began in 1983 when an ordinance was enacted under the Nuisance Ordinance to ban the posting of notices in public spaces, light posts, etc. Since that time there has not been any public outcry for anything to replace this function. She stated there are two places in the current Code of Ordinances where the language is ineffective and needs to be fixed. She has heard from city staff that there are two locations that are regarded as kiosks; at Riverside by the bridge and the other is on S. Grove. If this is the case, it should be brought to the attention of the public that public noticing is allowed at these two locations.

She detailed the specific ordinances with which she had concerns – adding that the ordinances in question do not function in a way that would be advantageous to the public. She realizes this is not under the jurisdiction of the Planning Commission but she is looking to gain support to go before City Council.

Since there is no newspaper in the city, there is no way to get information to the public. She would like to see everyone treated equally and by having kiosks, there would be a specific location for all people in the city to post their information. She also pointed out that it is possible that it is an ACLU violation to have an ordinance on the books that restricts freedom of speech; if someone posted something and the city enforced the ordinance by taking it down, it might be a violation. She referred to an ordinance in Ann Arbor and it is her opinion that the City of Ypsilanti should mirror that ordinance.

V. PRESENTATION AND PUBLIC HEARING ITEMS

1. 9 Casler – Serious Sober Living

City Planner Wessler stated that this is a request to rezone a parcel on the north-east of Spring/Harriet and Huron intersection, near intersection of Casler and Bell. It has been used in the past as a single family home and is surrounded in the immediate area by single family homes, and in the wider area, some multi-family and just to the northeast as you go to the south, there are a mix of uses. In the Master Plan it does not distinguish between the three levels of zoning for core neighborhoods. The property is currently zoned CN-Mid, as are the other properties fronting on to Casler. The applicant is looking to rezone to CN, Core Neighborhood that would permit an increase in density as well as rooming houses, etc. At this time, staff is recommending denial.

Commissioner Hollifield moved to open the public portion of the hearing (Support: J. McGadney) and the motion carried.

Kirk Winnega, who was accompanied by his wife, owners of the property – stated that it is their belief they do fit into the neighborhood. Although they are non-profit, they are a good example to others. They have been blessed and want to give back – although they are a non-profit, they don't make any money. The people have to be students; there are curfews;

have drug testing, they work with counsellors as well as their families help them write resumes. The kids know they have to follow strict rules. They have no neighbors to the right – most of the kids have no cars so traffic is not a problem. They take kids for free. Mr Winnega stated that they'd put a deed restriction on the house for single-family and similar uses only if they were approved.

Jacob Winnega – is the son of the owners - helps manage the site – he has been sober for 6 years and wants to help with others like the help he got.

Commissioner Hollifield moved to close the public portion of the hearing (Support: J. Donnelly) and the motion carried unanimously.

Commissioner Talaga how many residents they currently have and Mr. Winnega responded that they currently have six. Commissioner Simmons asked how long they had been in existence and Mr. Winnega responded they have been in existence for one year. Ms. Wessler added that they are allowed to operate while they are going through this procedure.

Ms. Wessler also discussed conditional map rezoning that could be granted in conformance with the Master Plan, as the applicants had freely offered a condition in a public meeting in compliance with the ordinance, and asked if the applicant and the Planning Commission might like to proceed with the Conditional Rezoning process rather than the original process. After further discussion, Commissioner Talaga moved to table this item for 9 Casler allowing staff to discuss conditional rezoning with the applicant and revisit at the next Planning Commission Meeting and proceed with recommendation to council from there. (Support: P. Hollifield) and the motion carried unanimously.

VI. OLD BUSINESS

1. 307 N River – Site Plan Review.

This item was tabled 7/18/2018 – to remain on table.

2. Medical Marijuana Provisioning Centers: Increase in buffer

Tabled from 3/21/2108 – Item to remain on table.

VII. NEW BUSINESS

1. Annual Report

Planner Wessler reviewed information on business completed this past year and projects that we hope to work on in 2019. Some discussion was held on the Bell/Kramer area as well as eco-districts. Commissioner Hollifield moved to approve the annual report with transmittal to City Council (Support: J. McGadney) and the motion carried unanimously.

2. 2019 Schedule of Meetings

DRAFT

Commissioner Hollifield moved to approve schedule of meetings for 2019 (Support: J. Talaga) and the motion carried unanimously.

3. Reappointment of Members to the Non-Motorized Transportation Committee

Commissioner Hollifield moved to approve the re-appointment of members B. Krzewinski and Sarah Walsh to the Non-Motorized Committee (Support: J. McGadney) and the motion carried unanimously. Mr. Krzewinski asked if staff was aware of anyone who would be interested in being on the committee, to let him know.

4. Public Kiosks

Chair Dunwoodie stated that since Commissioner Hollifield was not in attendance at the last meeting and since he is the senior member of the board, he wondered if he had any thoughts on the possible use of kiosks in the city to allow residents to post information. Commissioner Hollifield stated that he is torn about the way things look. Not everyone is into social media but wondered about the possibility if there was some electronic way to post stuff that would only be up for a limited amount of time, he would be supportive of that. McGadney asked if there is any mechanism for us to get kiosks and Chair Dunwoodie responded that like the Human Relations Commission, we do not have control over ordinance enforcement or money for construction of kiosks. We could do a resolution in support.

Chair Dunwoodie stated that there seems to be some confusion if there are currently kiosks and if so, where they are located. Planner Wessler stated that they are new; they were installed as part of the Water St trail and bridge; one at the north end of pedestrian bridge and another at the terminus of the trail at South Grove. They look a lot like bulletin boards and anyone should be able to post a flyer there.

Bob Krzewinski added that he would caution kiosks be located on the border-to-border trail and some discussion be held with the Parks and Recreation since at some time, there will be maps, etc. along the trail and could be confusing with people posting information that does not apply to the trail.

Based on discussion of the Commissioners, Ms. Wessler recommended the following verbiage as a starting place for a resolution:

"Whereas the Planning Commission is in receipt of the Human Relations Commission resolution #2018-03, regarding Section 42-81 of the Ypsilanti Code of Ordinances, and Whereas members of the Human Relations Commission and members of the public have come before the Planning Commission to express support of this subject;
Now let it be resolved that Planning Commission refer this matter to City Council for further consideration of Resolution 2018-03."

Commissioner McGadney moved to approve the resolution as noted above (Support: J. Talaga) and the motion carried unanimously.

DRAFT

VIII. FUTURE BUSINESS DISCUSSION/UPDATES

January – discussion of general corridor 1000' buffer for medical marijuana provisioning centers, parking standards, corner visibility standards, commercial sales and use of firearms.

IX. COMMITTEE REPORTS

1. Non-motorized Committee Report

No committee report available.

2. Master Plan – Housing Affordability/Access subcommittee report

No committee report available.

3. RFP

Ms. Wessler stated that staff did put an RFP for a Master Plan update and Sustainability Plan all on one. A lot of our plans are being updated in the coming year!

X. ADJOURNMENT

Since there was no further business, Commissioner McGadney moved to adjourn the meeting (Support: J. Donnelly) and the motion carried unanimously. The meeting adjourned at 9:01 pm.

DRAFT

City of Ypsilanti

Community & Economic Development Department

Memo

To: Planning COmmission

From: Bonnie Wessler, City Planner

Date: 11 January 2019

Subject: Capital Improvements Review: 2019 Pavement Maintenance Program

Contents of this packet:

- Program overview memo (this memo)
- Huron:
    - Planning Staff Memo
    - Engineer worksheet
    - Detail plans for project area
- Congress:
    - Planning Staff Memo
    - Engineer worksheet
    - Detail plans for project area
- Harriet:
    - Planning Staff Memo
    - Engineer worksheet
    - Detail plans for project area
- Typical details for project as a whole
- Correspondence with AAATA

OVERALL DETAILS FOR THE PROJECT

This is a pavement maintenance project, largely funded by federal STP funds (80% federal, 20% local). Such projects are generally specified, far in advance; a five-year timeframe is generally assumed. As the project approaches being realized- generally one to two years in advance- design is finalized. For instance, for the early 2018 PM program that involved Congress and North Hamilton, PC reviewed it in April 2017, and it had been planned for some time before that.

Due to staffing changes both with our City engineers and the City in 2018, the timeframe for this project is rather more compressed, which somewhat limits design flexibility. Changes of more than 25% of the budget- additions or subtractions- can cause significant delays; delays can cause the funding to “expire.” This is the case even when additional Federal monies are not

requested and the City chooses to self-fund the changes. In addition, due to the way roads funding is allocated in the state, a change in STP funding used in one year may affect the amount of funding allocated or available in future years. Thus, the value of any changes proposed must be weighed against the value of having the project done this year rather than some future year, and potentially delaying or altering the timeline of those future planned projects as well. Should Planning Commission choose to recommend design changes that might alter the timeline of this project, the recommendations will be referred to Council.

Please note that this is a Capital Improvements Review, not a Complete Streets Review. Complete Streets review is triggered in the case of a reconstruction, such as the upcoming West Cross project (~2020); this is preventative maintenance. As some of you may recall, we adopted a Capital Improvements Plan in 2015 that has only been lightly updated; staff is working on another update this year that we hope will make capital improvements review less time-constrained and ensure the capital improvements performed more closely align with adopted City policies.

The source of funding limits design choices somewhat; as federal funding is being used, MDOT has issued rules that must be followed. Generally, these follow the American Association of State Highway and Transportation Officials (AASHTO) guidelines; MDOT will allow for certain exceptions or variances under certain specific conditions.

OVERALL STAFF REMARKS AND RECOMMENDATIONS ON THE PROJECT

- The posted speed for North Huron is noted incorrectly on the cover sheet. The posted speed for N Huron is 25 mph, not 35.
- The design speed for each road is noted at 5mph above the posted speed in each location. As these are local roads over level terrain in an urban environment, staff believes the design speed should be set no higher than the posted speed limit, and perhaps to 20mph in all cases. Per the FHWA, “Research confirms that lower speeds are safer and lowering speed limits can decrease both crash frequency and severity. However, speeds cannot be reduced simply by changing the posted speed limit. Geometric and cross-sectional elements, in combination with the context, establish a driving environment where drivers choose speeds that feel reasonable and comfortable.” (FHWA, 2019) This distinction may not have an effect upon these particular roads, but a policy shift may affect the design of future projects. Please note that this policy shift of setting the design speed below posted speed may require a design exception or variance which may not be granted in all cases; better advance planning may be required, &/or a policy to, for the time being, set the design speed at the posted speed.
- Bus stops are located within the project extents on both Harriet and Congress. The AATA was contacted prior to the PC meeting, and would appreciate the addition of bus pads in these locations due to ridership. These routes are not anticipated to change in the near future. The City has coordinated with AAATA on bus pads in the past; combining installation with roadworks provides cost savings and minimizes both the number of disturbances and the extent of disturbances to the area with construction.
- The project extent for the Congress PM ends before the intersection of Congress and Mansfield. Mansfield is a “border street;” that is, it is the line between the City and the

Township. The project extents were determined at least in part due to jurisdictional coordination issues. Planning staff recommends that in the future, those roads projects which approach or could include a border, including PM projects, be planned in coordination with the appropriate body, in this case the WCRC. In this particular case, the pavement approaching the intersection will not be repaired, and will have to be repaired either as a standalone project, which would be more expensive, or with another adjacent project- involving jurisdictional coordination at that point in time.

- Crosswalk placement (or lack thereof) is subject to review by the AACIL. There are three unique intersections in the project extents – Washington at Huron and Congress/N Congress/S Congress, both intersections with an acute angle; and Florence, which is not signed as nor legible as a road and may need to be considered for "demotion." Staff is working with engineers and the legal team to ensure both adherence to the terms of the settlement with the AACIL and safety for all users.

THE CITY OF YPSILANTI
IN COOPERATION WITH THE
MICHIGAN DEPARTMENT OF TRANSPORTATION
&
THE FEDERAL HIGHWAY ADMINISTRATION
2019 MAJOR ROAD PROGRAM

MDOT STANDARD PLANS AND DETAILS

R-1-G	COVER D
R-28-J	SIDEWALK RAMP AND DETECTABLE WARNING DETAILS
R-29-I	DRIVEWAY OPENINGS & APPROACHES AND CONCRETE SIDEWALKS
R-30-G	CONCRETE CURB AND CONCRETE CURB & GUTTER
R-83	ISOLATION JOINT DETAILS
R-96-E	SOIL EROSION & SEDIMENTATION CONTROL MEASURES
SIGN-120-D	ROADSIDE SIGN LOCATIONS AND SUPPORT SPACING
SIGN-200-D	STEEL POSTS
WZD-125-E	TEMPORARY TRAFFIC CONTROL DEVICES
PAVE-961-B	SHARED LANE (SHARROW) MARKING

MICHIGAN PROJECT

JOB NUMBER	–
CONTROL SECTION	–
FEDERAL ITEM NO.	–
FEDERAL PROJECT NO.	–

PROJECT LIMIT–S CONGRESS
POB STA 20+40
POE STA 43+22

PROJECT LIMIT–N HURON
POB STA 0+19
POE STA 12+00

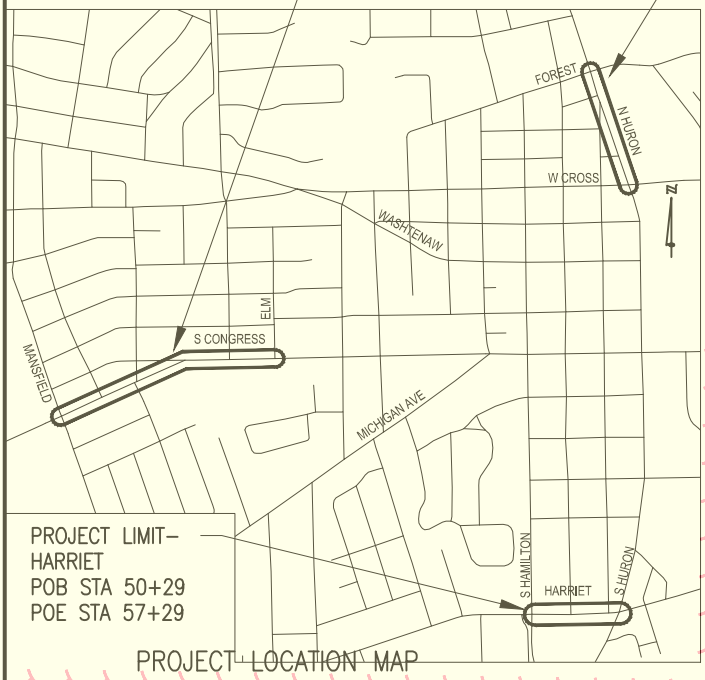

PROJECT LIMIT–
HARRIET
POB STA 50+29
POE STA 57+29

PROJECT LOCATION MAP

Design Guidelines:	Congress	Harriet	Huron
Posted Speed: (MPH)	25	30	35
Design Speed: (MPH)	30	35	30
Present ADT:	2,270	5,182	7,510
% Commercial:	5	5	5
Future ADT:	2,773	6,329	9,173
% Commercial:	5	5	5
Calender Year:	2029	2029	2029

GENERAL PROVISIONS

THE IMPROVEMENTS COVERED BY THIS LOG SHALL BE DONE IN ACCORDANCE WITH THE PROPOSAL AND ACCOMPANYING SPECIFICATIONS FOR THIS PROJECT INCLUDING THE 2012 MICHIGAN DEPARTMENT OF TRANSPORTATION STANDARD SPECIFICATIONS FOR CONSTRUCTION AND HAVE BEEN DESIGNED IN ACCORDANCE WITH THE MICHIGAN DEPARTMENT OF TRANSPORTATION LOCAL AGENCY PROGRAMS GUIDELINES FOR GEOMETRICS, DATED MARCH 4, 2014.

TRAFFIC CONTROL SHALL CONFORM TO THE LATEST VERSION OF THE MICHIGAN MANUAL OF UNIFORM TRAFFIC CONTROL DEVICES.

NOTICE SHALL BE GIVEN TO MISS DIG PRIOR TO UNDERGROUND WORK IF PERFORMED IN ACCORDANCE WITH THIS CONTRACT, PHONE (800) 482-7171 OR 811. UTILITY SERVICE CONNECTIONS ARE NOT SHOWN IN THE LOG AND ARE NOT THE RESPONSIBILITY OF THE CITY.

CONTRACT FOR: 4,400 LFT OF ROADWAY MILL & FILL AND SIDEWALK RAMP IMPROVEMENTS

PREPARED UNDER THE SUPERVISION OF:

RICHARD R. HOBGOOD
6201051376
Registration No.

Date

CITY OF YPSILANTI APPROVAL

DARWIN D.P. MCCLARY

Date

OHM
Advancing Communities
Engineering Advisors

34000 Plymouth Road | Livonia, MI 48150
p (734) 522-6711 | f (734) 522-6427

REVISIONS
FEDERAL NUMBERS ADDED:

PROJECT NO.	SHEET NO.
0094-18-0020	1

FEDERAL ITEM
FEDERAL PROJECT
CS JN
©

COVERSHEET.DWG

City of Ypsilanti

Community & Economic Development Department

Memo

To: Planning Commission

From: Bonnie Wessler, City Planner

Date: 07 January 2019

Subject: N Huron mill & overlay, Cross to Forest

N Huron is a one-way northbound local road. Within the project bounds, it intersects Cross (signalized), Florence (T from the west), Washington (angle from the west), Arcade (T from the west), and Forest (signalized). There are no bike facilities on this road, nor are there bus stops. It is a well-travelled northbound connector, regularly used by pedestrians, bicyclists, and drivers. There are no sidewalk gaps in the area. ADA ramps are absent at Florence and at Washington, and proposed to be upgraded/added at each. Ramps at Arcade were installed in 2018. On-street parking is available on the east side of the street from Cross to approximately Washington, and is unrestricted. Pedestrian traffic is heavy year-round due to Depot Town and EMU adjacency. The on-street parking is heavily used in the project area, and is directly correlated to housing density; the area likely also sees event traffic from Depot Town.

Currently, the City DPS & Engineers are proposing the addition of a bumpout on the northeast corner of Cross and on the east side of the street at the south side of the intersection with Washington. New crosswalks, without bumpouts, are being proposed at Florence, per the agreement with the AACIL. How these are constructed and signed will be discussed with the AACIL. No new crosswalk is currently being proposed at the north side of the Washington intersection due to the long crossing distance and the proximity to the Arcade crosswalk; this, too, is subject to AACIL review and consent. Bike lanes are not proposed due to the right-of-way constraints; bike lanes and other facilities may be revisited if/when Huron south of this location is reconfigured in, presumably, 2022.

A bumpout is being proposed at the south side of the Arcade crosswalk (not shown on these drawings) and parking allowed south of the Arcade bumpout. This would serve to constrain the roadway, define the parking area, and potentially help slow traffic. As part of a future Washington paving project or any two-way conversion project, the intersection between Washington and Huron should be “tee’d up”; the momentarily wide expanse of pavement does not contribute to traffic safety. Staff does not recommend “bike route” or sharrows at this location; in this general area (Hamilton to Huron), staff defers to the Nonmotorized Committee’s recommendation to guide bicycle traffic to Adams for safety.

(1) Inventory the proposed geographical extent of the project.

- Functional Classification: Major Collector
- Huron-Cross to Forest
- Right of Way width: 66'
- Traffic lanes: 2
- ON-street parking: Yes, east side of road between Cross and Arcade.
- Existing vehicular ADT: 7510, per SEMCOG 2015
- Projected vehicular ADT: 9160
- Speed limit: 25 MPH
- Percent heavy vehicles: 5%
- Center turn lane: No
- Transit facilities: None
- Bicycle facilities: None.
- Sidewalks: Both sides of road, full length of project. All ramps to be ADA-compliant.
- Landscaping w/in ROW: All disturbed areas to be restored with topsoil, seed, and mulch. Trees to be removed only if necessary. (None anticipated)
- Lighting: Street lights on wood poles. No anticipated changes.

(2) Check for consistency with adopted plans & City legal obligations:

- Master Plan: Change Huron from one-way to two-way traffic. Pg 37 of master plan.
- Non-Motorized Transportation Plan
  - Does the plan note any deficiencies in the area under consideration? Please list & cite page numbers.
    - Pg 52, B2B Trail tie in
- ADA settlement/ADA compliance plan
  - Does the proposed project contain any locations slated for upgrade in the ADA compliance plan?
    All ramps within the project limits are to be compliant to the most current ADA standards.
    Note that all corners have to be ramped, include the diagrams from latest settlement.

(3) Motor Vehicle Facilities (non-freight)

- Major Street: <10,000 ADT
  N Huron is a Major Collector Road per NFC classification
  - **2 travel lanes + 1 parking lane**
  - **Proposed 11' travel lanes**
  - **Posted speed limit 25 MPH**
- On-street parking: does it exist, where, what type (permit, unrestricted), and how wide the lane?
  - On street parking is on the east side of road between Cross and Arcade Parking is unrestricted.

(4) Transit facilities

- Bus
- No Bus route
  - Consult with AAATA on all capital improvement projects w/in 100' of a stop or on a bus route.
  - When a bus stop is located within the geographic scope of a capital improvement (ex, a bus stop on a street), ensure that the bus stop will be ADA-compliant (add concrete pad) and the stop will not be blocked

by on-street parking ("no parking, bus stop" markings) and that any bike lanes in the area are appropriately marked by broken lines & other MUTCD-compliant symbols as necessary.

(5) Check for bike facilities

- Transitions- at intersections, not mid-block
  - If Bike lane to no-bikelane: signage per MUTCD (bike lane ends, share the road signage, sharrow), & ensure there is a receiving xwalk ramp nearby
  - If No-bikelane to bikelane: signage per MUTCD (bike lane pavement markings, bike lane begins signage; placement at intersections, not mid-block)
- Lanes of travel
  - Bike lanes
    - Required on:
      - Major Streets: all.
      - **No existing bike lanes. Insufficient road/ROW width for new bike lanes on proposed roadway. Road functions as Neighborhood Street, low volume, low speed. Standard practice is to not stripe bike lanes in this condition.**
      - Local Streets: where ADT ≥ 10,000
    - 4' wide minimum, exclusive of gutter pan
    - Wider by 1', max of 10', for
      - each 5 mph above a 25mph speed limit (ex: 35mph = 6', exclusive of gutter pan) OR
      - for each 5,000 by which ADT exceeds 10,000,
    - Pavement markings (bike lane decal) every block, in addition to 6" lane marking
  - Sharrows & other signage
    - Major Streets: Required wherever the ROW is too narrow for bike lanes (ex, Michigan Ave downtown) – "bikes may use full lane," etc
    - Local streets: at "entrances" to neighborhoods (ex. Perry Street south of Harriet; First south of Harriet; Mansfield north of Washtenaw)- where traffic would be turning/transitioning from a Major Street to a Local Street.
      - **No Proposed sharrows**
- Parking
  - Major Streets: ROW parking for bicycles recommended in commercial/mixed-use areas where on-street car parking is provided (ex: downtown, depot town)
    - Placed on-street (seasonal racks) or in sidewalk buffer area
    - If overnight or long-term car facilities are in place, then also place overnight/long-term bike facilities.

(6) Check for pedestrian facilities

- Crosswalks
  - ADA compliant- all corners
    - **NE & NW quadrants of Cross and Huron. All four quadrants at Florence and Huron. New cross walks installed at SE & SW corner Washington and Huron. Arcade and Huron ramps have previously been brought into compliance and will not have any work performed.**

- Striping/marking
  - Major Streets: Longitudinal ("piano keys")
    - If crosswalk is less than 6' wide, enclose longitudinal with transverse for visibility
  - Local Streets: longitudinal preferred, transverse permitted
  - If alternate paving materials or texturizing is used on crosswalks- ex, stamped concrete- enclose with transverse markings for visibility.
- Lighting: required on all Major Streets; recommended on Local Streets
- Bumpouts on all Major Streets where on-street parking is provided
  - **Crossing markings currently set up as longitudinal at the signalized and stop controlled intersections. Continental markings will be installed at mid-block crossings.**
  - **Bump outs are being proposed at NE corner Cross and Huron as well as SE corner of Arcade and Huron.**

- Sidewalks
  - **All sidewalks are to remain as-is. Trip hazard slabs will be replaced.**
  - ADA compliant- grading, width, materials
  - Major Streets in commercial/mixed-use:
    - aim for 10' wide, 6' min
    - 5' buffer between sidewalk and street
    - Lighted
  - Major Streets in residential-only:
    - 5'-10' wide (context-sensitive)
    - 10'-6' buffer
    - Lighted
  - Local Streets:
    - min of 5' wide
    - min 6' buffer.

N. HURON STREET

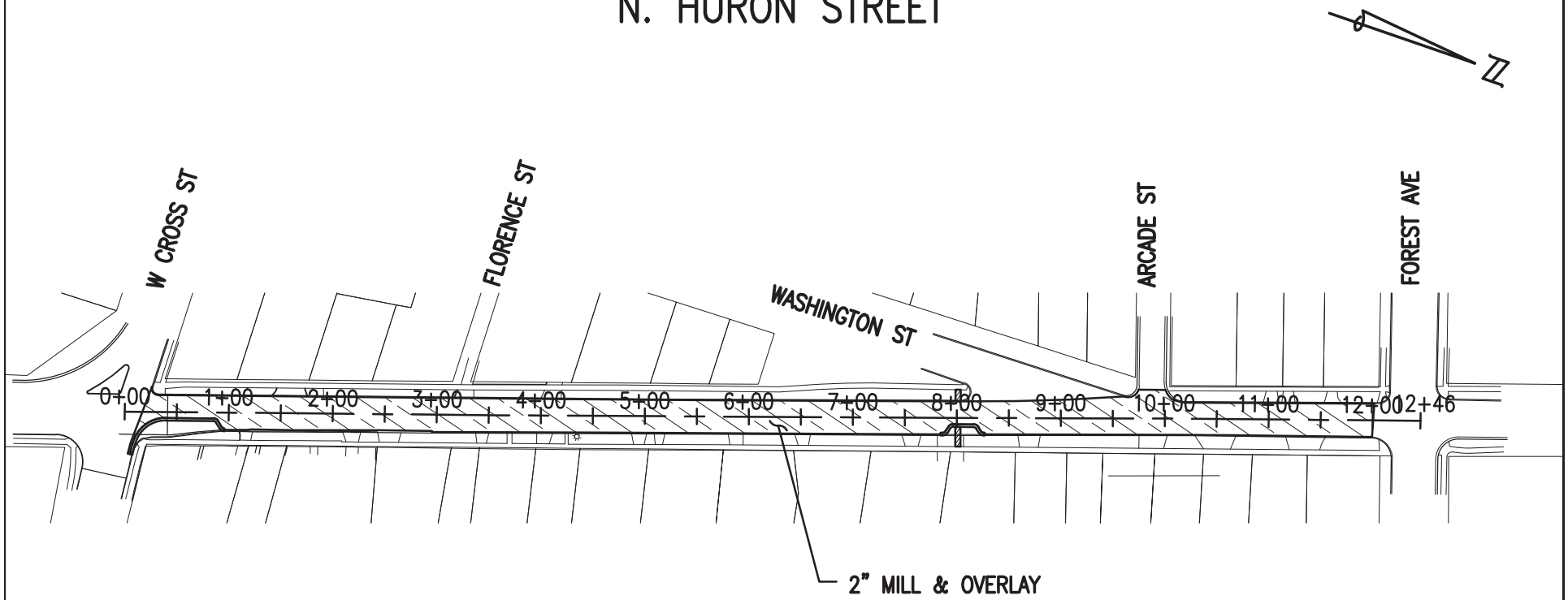

Know what's below.
Call before you dig.

2019 ROAD REPAIRS
N. HURON STREET
POB STA 0+19 TO POE STA 12+00

SCALE
H: 1"=150' V: N/A

SHEET
6
OF 20

CLIENT:
CITY OF YPSILANTI

JOB #
0094-18-0020

34000 Plymouth Road | Livonia, MI 48150 | P (734) 522-6711 | F (734) 522-6427 | WWW.OHM-ADVISORS.COM

COPYRIGHT 2017 OHM ALL DRAWINGS AND WRITTEN MATERIALS APPEARING HEREIN CONSTITUTE THE ORIGINAL AND UNPUBLISHED WORK OF OHM AND THE SAME MAY NOT BE DUPLICATED, DISTRIBUTED, OR DISCLOSED WITHOUT PRIOR WRITTEN CONSENT OF OHM

DRAWING PATH: P:\0000_0100\0094180020_2019_FAC\Drawings\Civil\Plans_Const\180020CON.dwg Dec 07, 2018 – 8:58am

JOB BENCHMARK #200
CHISELED "+" ON NE BOLT
STRAIN POLE AT NW QUADRANT
N. HURON AND E. CROSS
ELEV 731.50

JOB BENCHMARK #201
SET COTTON SPINDLE IN W FACE
LIGHT POLE E SIDE NO HURON
BETWEEN 408 & 410 N HURON
ELEV 730.84

TRAVERSE POINT #100
N 272746.42
E 13327242.91 ELEV 730.50

TRAVERSE POINT #101
N 272913.60
E 13327231.01 ELEV 729.79

N. HURON STREET

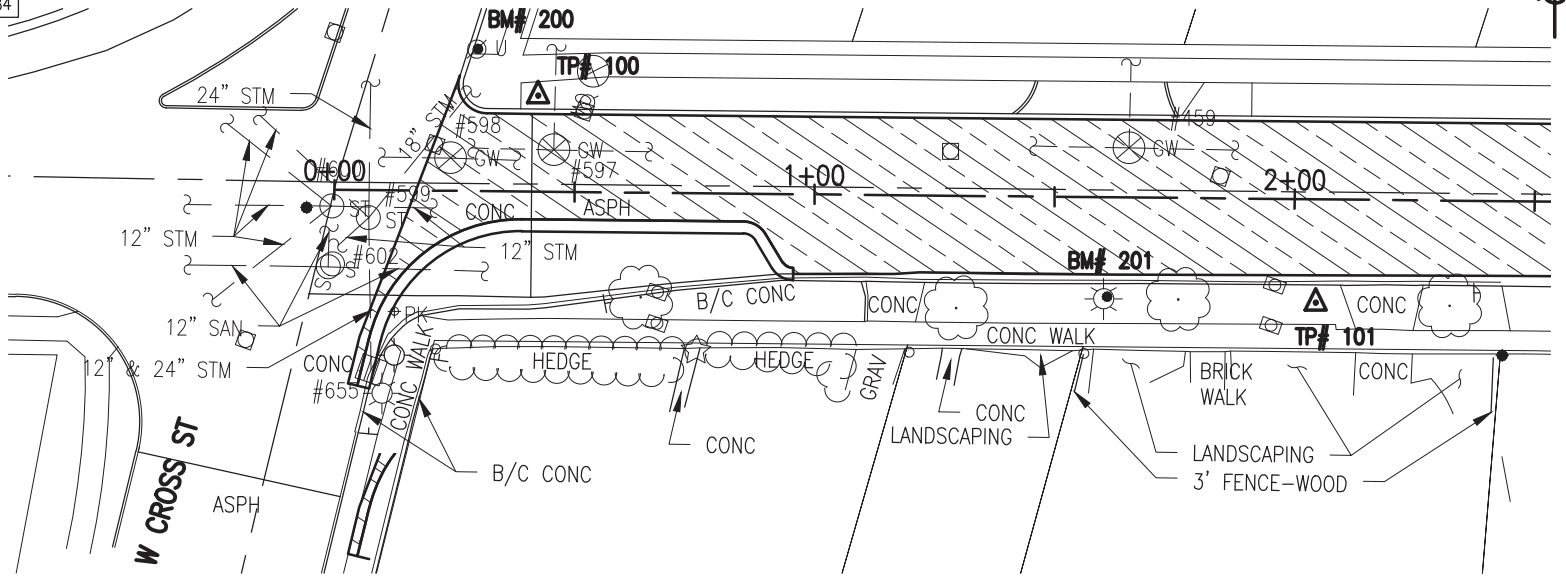

IRON REBAR-MON BOX
#602 SANITARY MANHOLE T/CAST 730.12
12" CONC INV W 722.64
12" CONC INV S 722.64
12" CONC INV N 722.99
#600 STORM MANHOLE T/CAST 730.12
12" CONC INV N 721.47
12" CONC INV S 723.72
12" CONC INV SE 722.99
12" CONC INV SW 723.94
#599 STORM MANHOLE T/CAST 730.13
12" CONC INV SW 720.81
12" CONC INV SE 723.72
12" CONC INV E 725.20
24" CONC INV W 721.49
18" CONC INV NW 721.40
24" CONC INV E 721.41
#655 SQ CATCH BASIN T/CAST 729.58
12" CLAY INV W 725.40
SIGN-REGULATORY
STL LIGHT POLE
PK NAIL-FD
CROSSWALK SIGNAL
IRON PIPE-FD
#598 GATE WELL T/CAST 730.11
D.I.P T/P N-S 725.51
SIGN-REGULATORY
#597 GATE WELL T/CAST 730.00
D.I.P T/P N/S/W 725.00
SIGN-REGULATORY
CL2 DECID TREE 12"
CONIFEROUS SHRUB 7x20
IRON PIPE-FD
#499 GATE VALVE T/CAST 729.61
CL1 DECID TREE 2"
IRON PIPE-DST
LIGHT POLE
#459 GATE WELL T/CAST 729.57
D.I.P T/P N, S, W 724.77
CL2 DECID TREE 16"
CL2 DECID TREE 6"
SIGN-REGULATORY
CAPPED IRON REBAR

811 Know what's below. Call before you dig.

2019 ROAD REPAIRS
PROPOSED HURON STREET BUMP OUT

SCALE H: 1"=40' V: N/A
SHEET 7 OF 20

CLIENT: CITY OF YPSILANTI
JOB # 0094-18-0020

OHM

34000 Plymouth Road | Livonia, MI 48150 | P (734) 522-6711 | F (734) 522-6427 | WWW.OHM-ADVISORS.COM

COPYRIGHT 2017 OHM ALL DRAWINGS AND WRITTEN MATERIALS APPEARING HEREIN CONSTITUTE THE ORIGINAL AND UNPUBLISHED WORK OF OHM AND THE SAME MAY NOT BE DUPLICATED, DISTRIBUTED, OR DISCLOSED WITHOUT PRIOR WRITTEN CONSENT OF OHM

DRAWING PATH: P:\0000_0100\0094180020_2019_FAC\Drawings\Civil\Plans_Const\180020CON.dwg Dec 07, 2018 - 8:58am

City of Ypsilanti

Community & Economic Development Department

Memo

To: Planning Commission

From: Bonnie Wessler, City Planner

Date: 07 January 2019

Subject: Congress mill & overlay, east of Mansfield to east of Elm

---

South Congress is a two-way local road that begins west of the City at Hewitt, and continues to its intersection with Michigan. Within the project bounds, it intersects Owendale (T from the north), Wallace (4-way stop), N Congress (3-way stop), and Oakwood (4-way). There are no bike facilities on this road, and the AAATA route 6B currently has 2.5 stops within the project area (Oakwood, Wallace, Mansfield westbound). It is a well-travelled east-west connector for the neighborhood, regularly used by pedestrians, bicyclists, and drivers. There is one sidewalk gap along the north side of the street between Wallace and N Congress; due to right-of-way constraints and existing encroachments, no sidewalks are proposed to be added as part of this project. ADA ramps are absent at several intersections, and proposed to be upgraded/added at each. On-street parking is available on the north side of the street in the project area, and is unrestricted.

Pedestrian and bicyclist traffic is particularly heavy due to the presence of Recreation Park on Congress at the east end of the project bounds, and the schools to the west. The on-street parking is generally lightly used between Mansfield and N Congress, and use is directly correlated to housing density. Parking along the north side of the street between Oakwood and N Congress is generally heavily used during sporting events, particularly Little League, at Recreation Park, but otherwise correlates to housing density.

Currently, the City DPS & Engineers are proposing the addition of bumpouts on the north side of the street at the intersections with Owendale, Wallace, on the east side of the N Congress intersection, and Normal. The project limits end just shy of Mansfield, as Mansfield is the dividing line between WCRC jurisdiction and City jurisdiction; in addition. In the past, we have requested “Bikes May Use Full Lane” signage; however, this signage is not currently permitted in Michigan. “Bike Route” signage was installed along Congress in 2018 along with sharrows in lieu of this sign; staff and OHM recommend continuing both westward. Staff recommends constructing bus pads at Oakwood, Wallace, and Mansfield.

Staff further recommends that the Congress/North Congress/South Congress intersection be evaluated for additional traffic control measures due to neighborhood reports of drivers not stopping at the stop sign; this may be part of this project or programmed for the future due to timing and budget consdierations.

(1) Inventory the proposed geographical extent of the project.

- Functional Classification: Major Collector
- S. Congress- 25 ft West of Elm to Mansfield
- Right of Way width: 66'
- Traffic lanes: 2
- ON-street parking: Yes, north side of road
- Existing vehicular ADT: 2370, per Semcog counts for 2006
- Projected vehicular ADT: 2844
- Speed limit: 25 MPH
- Percent heavy vehicles: 5%
- Center turn lane: No
- Transit facilities: AAATA bus stop for routes #6B (Monday-Friday 2-way pick up, Saturday & Sunday 1-way pick up): @ Oakwood NE and SW.
- Bicycle facilities: None. Proposed sharrows.
- Sidewalks: South side of road for full length of project. North side of road for full length of project except for 370 ft on the north side of S Congress between N. Congress and Wallace. All ramps to be ADA-compliant.
- Landscaping w/in ROW: All disturbed areas to be restored with topsoil, seed, and mulch. Trees to be removed only if necessary. Not anticipated
- Lighting: Existing lighting on wood poles. No improvements proposed.

(2) Check for consistency with adopted plans & City legal obligations:

- Master Plan:
- Non-Motorized Transportation Plan
  - Does the plan note any deficiencies in the area under consideration? Please list & cite page numbers.
    - Pg 48, Sidewalk gap on S. Congress between N. Congress and Wallace.
    - Pg 54 Bike Lanes only
- ADA settlement/ADA compliance plan
  - Does the proposed project contain any locations slated for upgrade in the ADA compliance plan?
    All ramps within the project limits are to be compliant to the most current ADA standards.
    Note that all corners have to be ramped at non-jogged intersections. There are no jogged intersections within the project bounds.

(3) Motor Vehicle Facilities (non-freight)

- Major Street: <10,000 ADT
  Congress is a Major Collector Road per NFC classification
  - **2 travel lanes + 1 parking lane**
  - **Proposed 11' travel lanes;**
  - **Posted speed limit 25 MPH**
- On-street parking: does it exist, where, what type (permit, unrestricted), and how wide the lane?
  - Parking on north side of road, 7.5' parking lane, unrestricted parking

(4) Transit facilities

- Bus

- Consult with AAATA on all capital improvement projects w/in 100' of a stop or on a bus route.
- When a bus stop is located within the geographic scope of a capital improvement (ex, a bus stop on a street), ensure that the bus stop will be ADA-compliant (add concrete pad) and the stop will not be blocked by on-street parking ("no parking, bus stop" markings) and that any bike lanes in the area are appropriately marked by broken lines & other MUTCD-compliant symbols as necessary.

(5) Check for bike facilities

- Transitions- at intersections, not mid-block
  - If Bike lane to no-bikelane: signage per MUTCD (bike lane ends, share the road signage, sharrow), & ensure there is a receiving xwalk ramp nearby
  - If No-bikelane to bikelane: signage per MUTCD (bike lane pavement markings, bike lane begins signage; placement at intersections, not mid-block)
- Lanes of travel
  - Bike lanes
    - Required on:
      - Major Streets: all.
      - **No existing bike lanes. Insufficient road width for new bike lanes on proposed roadway. Road functions as neighborhood Street, low volume, low speed. Standard practice is to not stripe bike lanes in this condition.**
      - Local Streets: where ADT ≥ 10,000
    - 4' wide minimum, exclusive of gutter pan
    - Wider by 1', max of 10', for
      - each 5 mph above a 25mph speed limit (ex: 35mph = 6', exclusive of gutter pan) OR
      - for each 5,000 by which ADT exceeds 10,000,
    - Pavement markings (bike lane decal) every block, in addition to 6" lane marking
  - Sharrows & other signage
    - Major Streets: Required wherever the ROW is too narrow for bike lanes (ex, Michigan Ave downtown) – "bikes may use full lane," etc
    - Local streets: at "entrances" to neighborhoods (ex. Perry Street south of Harriet; First south of Harriet; Mansfield north of Washtenaw)- where traffic would be turning/transitioning from a Major Street to a Local Street.
      - Install sharrows along both sides of Congress.
- Parking
  - Major Streets: ROW parking for bicycles recommended in commercial/mixed-use areas where on-street car parking is provided (ex: downtown, depot town)
    - Placed on-street (seasonal racks) or in sidewalk buffer area
    - If overnight or long-term car facilities are in place, then also place overnight/long-term bike facilities.

(6) Check for pedestrian facilities

- Crosswalks
  - ADA compliant- all corners
    - **NE & SE corner of N. Congress and S. Congress, All quadrants at Oakwood & Congress, All quadrants at Wallace & S Congress, All quadrants at Owendale & S. Congress.**

- Striping/marking
  - Major Streets: Longitudinal ("piano keys")
    - If crosswalk is less than 6' wide, enclose longitudinal with transverse for visibility
  - Local Streets: longitudinal preferred, transverse permitted
  - If alternate paving materials or texturizing is used on crosswalks- ex, stamped concrete- enclose with transverse markings for visibility.
- Lighting: required on all Major Streets; recommended on Local Streets
- Bump outs on all Major Streets where on-street parking is provided
  - **Crossing markings currently set up as longitudinal at signalized or stop controlled intersections. Uncontrolled crosswalks to be continental style.**
  - **Bump outs proposed at NE & NW corner of Oakwood & Congress, at NE corner of N Congress & S. Congress and at NE & NW corner of Wallace & S. Congress, at NE & NW corner of Owendale & S. Congress. No bump outs proposed on south side of road due lack of lane with.**

- Sidewalks
  - **All sidewalks are to remain as-is. Trip hazard slabs will be replaced.**
  - ADA compliant- grading, width, materials
  - Major Streets in commercial/mixed-use:
    - aim for 10' wide, 6' min
    - 5' buffer between sidewalk and street
    - Lighted
  - Major Streets in residential-only:
    - 5'-10' wide (context-sensitive)
    - 10'-6' buffer
    - Lighted
  - Local Streets:
    - min of 5' wide
    - min 6' buffer.

CONGRESS STREET

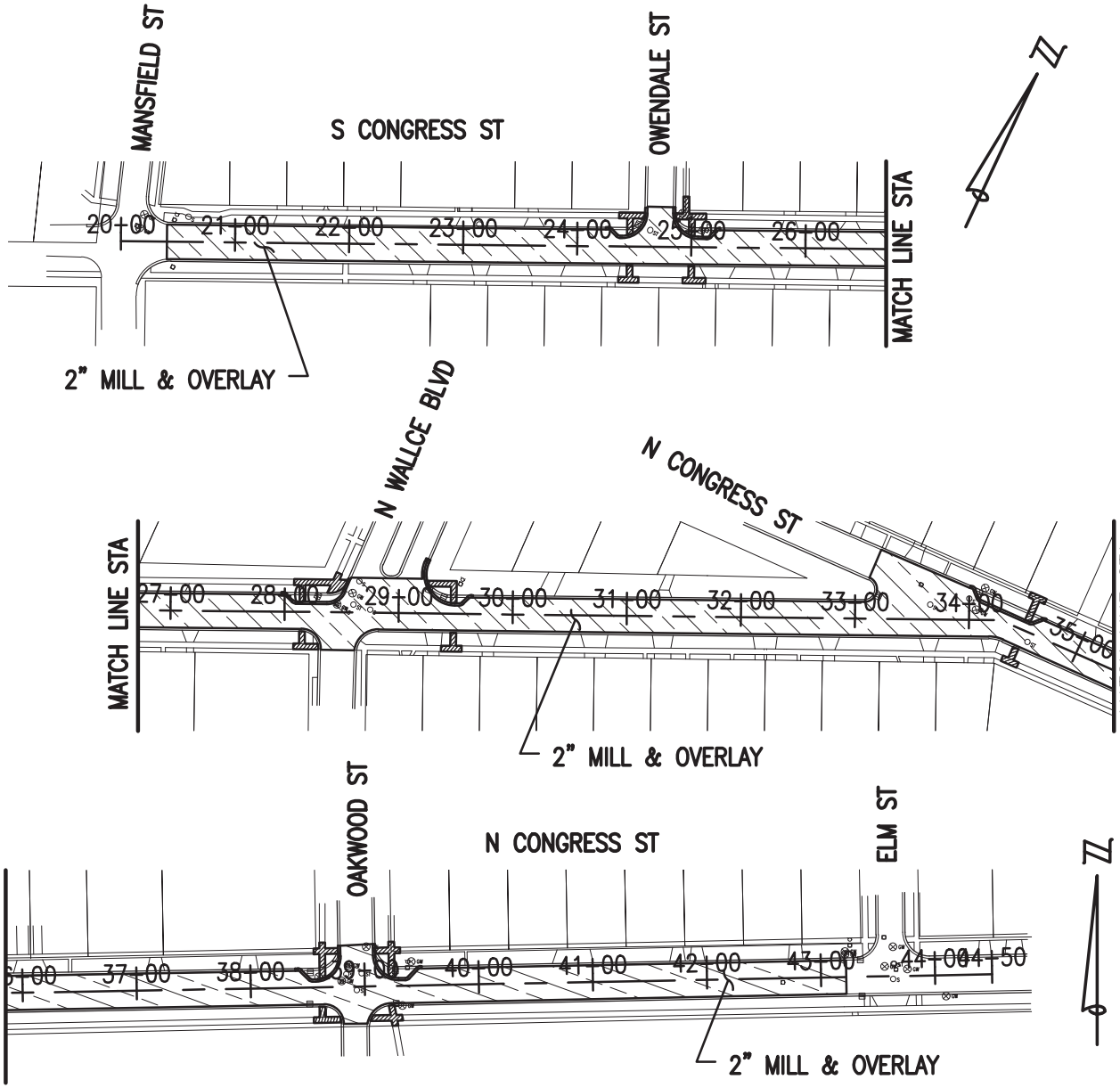

Know what's **below.**
Call before you dig.

2019 ROAD REPAIRS
S. CONGRESS STREET
POB STA 20+40 TO POE STA 43+22

SCALE
H: 1"=150' V: N/A

SHEET
4
OF 20

CLIENT:
CITY OF YPSILANTI

JOB #
0094-18-0020

34000 Plymouth Road | Livonia, MI 48150 | P (734) 522-6711 | F (734) 522-6427 | WWW.OHM-ADVISORS.COM

COPYRIGHT 2017 OHM ALL DRAWINGS AND WRITTEN MATERIALS APPEARING HEREIN CONSTITUTE THE ORIGINAL AND UNPUBLISHED WORK OF OHM AND THE SAME MAY NOT BE DUPLICATED, DISTRIBUTED, OR DISCLOSED WITHOUT PRIOR WRITTEN CONSENT OF OHM

DRAWING PATH: P:\0000_0100\0094180020_2019_FAC\Drawings\Civil\Plans_Const\180020CON.dwg Dec 07, 2018 – 8:57am

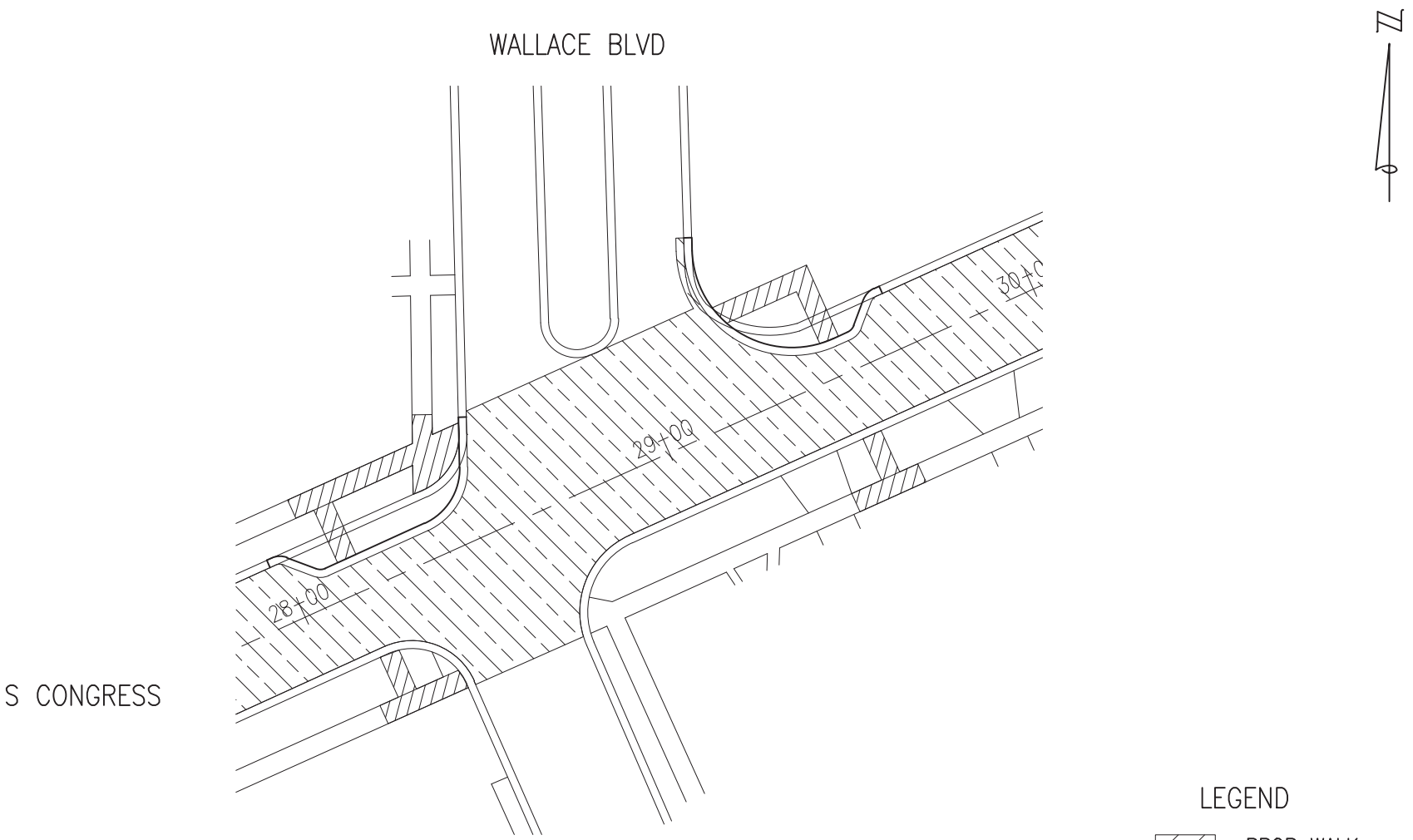

LOCATION OF DETAIL:
CORNER OF S CONGRESS & N WALLACE

LEGEND

PROP WALK

MILL & OVERLAY

PROP CURB

2019 ROAD REPAIRS
PROPOSED BUMP OUT

SCALE
H: NTS V: NTS

SHEET
9
OF 20

CLIENT:
CITY OF YPSILANTI

JOB #
0094-18-0020

34000 Plymouth Road | Livonia, MI 48150 | P (734) 522-6711 | F (734) 522-6427 | WWW.OHM-ADVISORS.COM

COPYRIGHT 2017 OHM ALL DRAWINGS AND WRITTEN MATERIALS APPEARING HEREIN CONSTITUTE THE ORIGINAL AND UNPUBLISHED WORK OF OHM AND THE SAME MAY NOT BE DUPLICATED, DISTRIBUTED, OR DISCLOSED WITHOUT PRIOR WRITTEN CONSENT OF OHM

DRAWING PATH: P:\0000_0100\0094180020_2019_FAC\Drawings\Civil\Details\180020DET_02.dwg Dec 07, 2018 – 8:58am

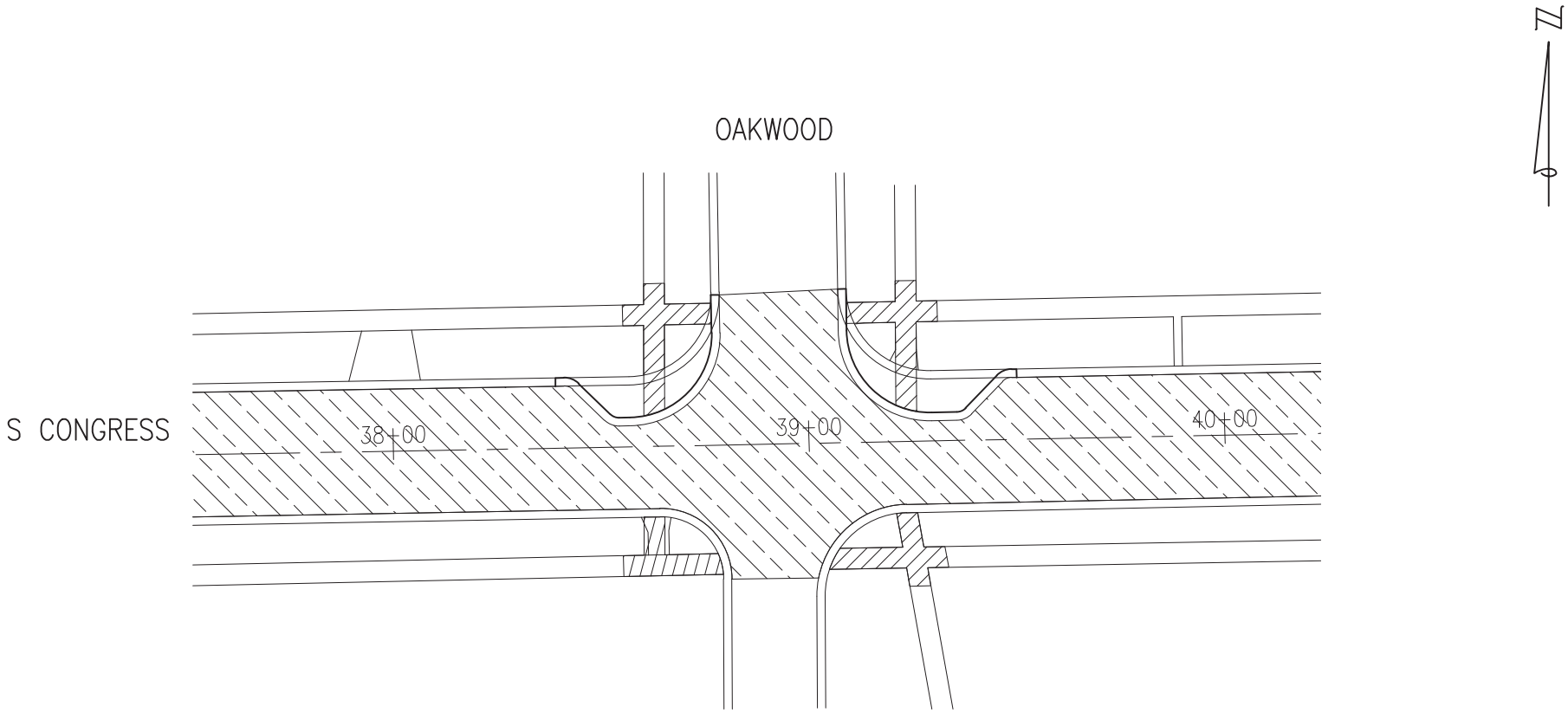

LEGEND

PROP WALK

MILL & OVERLAY

PROP CURB

LOCATION OF DETAIL:
CORNER OF S CONGRESS & OAKWOOD

2019 ROAD REPAIRS
PROPOSED CROSSWALK LAYOUT

SCALE
H: NTS V: NTS

SHEET
10
OF 20

CLIENT:
CITY OF YPSILANTI

JOB #
0094-18-0020

34000 Plymouth Road | Livonia, MI 48150 | P (734) 522-6711 | F (734) 522-6427 | WWW.OHM-ADVISORS.COM

COPYRIGHT 2017 OHM ALL DRAWINGS AND WRITTEN MATERIALS APPEARING HEREIN CONSTITUTE THE ORIGINAL AND UNPUBLISHED WORK OF OHM AND THE SAME MAY NOT BE DUPLICATED, DISTRIBUTED, OR DISCLOSED WITHOUT PRIOR WRITTEN CONSENT OF OHM

DRAWING PATH: P:\0000_0100\0094180020_2019_FAC\Drawings\Civil\Details\180020DET_02.dwg Dec 07, 2018 – 8:58am

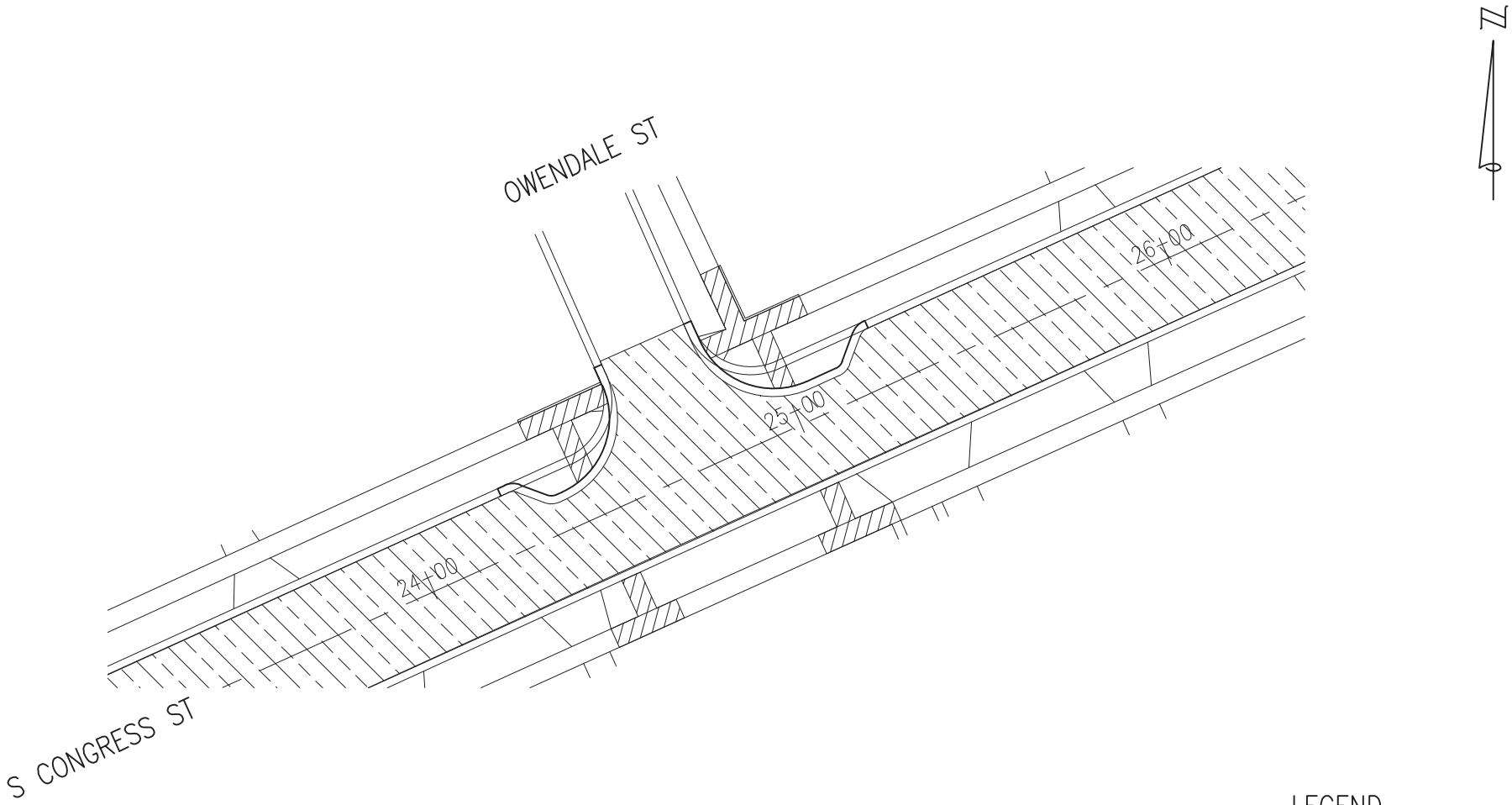

LEGEND

PROP WALK

MILL & OVERLAY

PROP CURB

LOCATION OF DETAIL:
CORNER OF S CONGRESS & OWENDALE

2019 ROAD REPAIRS
PROPOSED BUMP OUT

SCALE
H: NTS V: NTS

SHEET
11
OF 20

CLIENT:
CITY OF YPSILANTI

JOB #
0094-18-0020

34000 Plymouth Road | Livonia, MI 48150 | P (734) 522-6711 | F (734) 522-6427 | WWW.OHM-ADVISORS.COM

COPYRIGHT 2017 OHM ALL DRAWINGS AND WRITTEN MATERIALS APPEARING HEREIN CONSTITUTE THE ORIGINAL AND UNPUBLISHED WORK OF OHM AND THE SAME MAY NOT BE DUPLICATED, DISTRIBUTED, OR DISCLOSED WITHOUT PRIOR WRITTEN CONSENT OF OHM

DRAWING PATH: P:\0000_0100\0094180020_2019_FAC\Drawings\Civil\Details\180020DET_02.dwg Dec 07, 2018 – 8:58am

City of Ypsilanti

Community & Economic Development Department

Memo

To: Planning Commission

From: Bonnie Wessler, City Planner

Date: 07 January 2019

Subject: Harriet eastbound mill & overlay, Hamilton to west of Washington, complete streets review

---

The Complete Streets ordinance requires a full review for projects that are considered to be a "reconstruction" of the roadway. This is generally a project in which a road is taken down to its base, and rebuilt, such as the Prospect project. This project is a mill and overlay, with patching as needed; it is not a full reconstruction. However, it does provide an opportunity to make improvements to the roadway, and has been submitted to us for review.

Harriet is a two-way local road; only the southern (eastbound) lanes are being proposed for work. The project stops short of Hamilton due to right-of-way ownership; it stops short of Washington as the pavement changes to concrete at that intersection, which has different maintenance requirements. Within the project bounds, it intersects South Adams. There are no bike facilities on this road, but buses 45 and 47 stop just east of Hamilton. It is a very well-travelled connector, and part of the City's truck route system. It is regularly used by pedestrians, bicyclists, and drivers of all vehicle types; bicyclists primarily travel on the sidewalk due to the high volume of traffic in the area. There are no sidewalk gaps in the area. ADA ramps are absent at Adams, and are proposed to be added and pedestrian crossing signage installed.

Currently, the only change proposed in the project area is the addition of the Adams crosswalk. Staff and engineers acknowledge that Harriet from Hamilton eastward would be an excellent candidate for study as a road diet, and/or perhaps the addition of dedicated bike lanes and/or on-street parking depending upon the area's needs at the time. However, addressing the pavement condition should not be delayed to be coordinated with an as-yet unfunded and unscoped project. This mill & overlay of the westbound lanes was completed in 2014.

Staff does not recommend Bike Route signage nor sharrows in this location due to the very small project area and lack of connectivity with other projects. Staff does recommend installing a bus pad at the stop within the project area.

(1) Inventory the proposed geographical extent of the project.

- Functional Classification: Major Collector
- Harriet-WB Huron to Hamilton
- Right of Way width: 86'
- Traffic lanes: 5
- ON-street parking: No
- Existing vehicular ADT: 5182, per SEMCOG 2015
- Projected vehicular ADT: 6322
- Speed limit: 30 MPH
- Percent heavy vehicles: 5%
- Center turn lane: Yes
- Transit facilities: AATA routes 45 & 47 use Harriet, but do not have stops on Harriet.
- Bicycle facilities: None.
- Sidewalks: Both sides of road, full length of project. All ramps to be ADA-compliant.
- Landscaping w/in ROW: All disturbed areas to be restored with topsoil, seed, and mulch. Trees to be removed only if necessary. (None anticipated)
- Lighting: Street lights on wood poles. No anticipated changes.

(2) Check for consistency with adopted plans & City legal obligations:

- Master Plan: None
- Non-Motorized Transportation Plan
  - Does the plan note any deficiencies in the area under consideration? Please list & cite page numbers.
    - Bike lanes, pg 53
- ADA settlement/ADA compliance plan
  - Does the proposed project contain any locations slated for upgrade in the ADA compliance plan?
    All ramps within the project limits are to be compliant to the most current ADA standards.
    Note that all corners have to be ramped, include the diagrams from latest settlement.

(3) Motor Vehicle Facilities (non-freight)

- Major Street: <10,000 ADT
  Harriet is a Major Collector Road per NFC classification
  - **4 travel lanes + 1 center turn lane**
  - **Proposed 11' travel lanes**
  - **Posted speed limit 30 MPH**
- On-street parking: does it exist, where, what type (permit, unrestricted), and how wide the lane?
  - No parking

(4) Transit facilities

- Bus
- Bus routes 45 & 47 with no stops
  - Consult with AAATA on all capital improvement projects w/in 100' of a stop or on a bus route.
  - When a bus stop is located within the geographic scope of a capital improvement (ex, a bus stop on a street), ensure that the bus stop will be ADA-compliant (add concrete pad) and the stop will not be blocked

by on-street parking ("no parking, bus stop" markings) and that any bike lanes in the area are appropriately marked by broken lines & other MUTCD-compliant symbols as necessary.

(5) Check for bike facilities

- Transitions- at intersections, not mid-block
  - If Bike lane to no-bikelane: signage per MUTCD (bike lane ends, share the road signage, sharrow), & ensure there is a receiving xwalk ramp nearby
  - If No-bikelane to bikelane: signage per MUTCD (bike lane pavement markings, bike lane begins signage; placement at intersections, not mid-block)
- Lanes of travel
  - Bike lanes
    - Required on:
      - Major Streets: all.
      - **No existing bike lanes. Insufficient road/ROW width for new bike lanes on proposed roadway.**
      - Local Streets: where ADT ≥ 10,000
    - 4' wide minimum, exclusive of gutter pan
    - Wider by 1', max of 10', for
      - each 5 mph above a 25mph speed limit (ex: 35mph = 6', exclusive of gutter pan) OR
      - for each 5,000 by which ADT exceeds 10,000,
    - Pavement markings (bike lane decal) every block, in addition to 6" lane marking
  - Sharrows & other signage
    - Major Streets: Required wherever the ROW is too narrow for bike lanes (ex, Michigan Ave downtown) – "bikes may use full lane," etc
    - Local streets: at "entrances" to neighborhoods (ex. Perry Street south of Harriet; First south of Harriet; Mansfield north of Washtenaw)- where traffic would be turning/transitioning from a Major Street to a Local Street.
      - **Proposed sharrows**
- Parking
  - Major Streets: ROW parking for bicycles recommended in commercial/mixed-use areas where on-street car parking is provided (ex: downtown, depot town)
    - Placed on-street (seasonal racks) or in sidewalk buffer area
    - If overnight or long-term car facilities are in place, then also place overnight/long-term bike facilities.

(6) Check for pedestrian facilities

- Crosswalks
  - ADA compliant- all corners
    - **All four quadrants at Adams and Harriet. New cross walk installed at Adams and Harriet**
  - Striping/marking
    - Major Streets: Longitudinal ("piano keys")
      - If crosswalk is less than 6' wide, enclose longitudinal with transverse for visibility
    - Local Streets: longitudinal preferred, transverse permitted

        - If alternate paving materials or texturizing is used on crosswalks- ex, stamped concrete- enclose with transverse markings for visibility.
    - Lighting: required on all Major Streets; recommended on Local Streets
    - Bumpouts on all Major Streets where on-street parking is provided
        - **Crossing markings currently set up as longitudinal at the signalized and stop controlled intersections. Continental markings will be installed at mid-block crossings.**
        - **No bump outs proposed.**
- Sidewalks
    - **All sidewalks are to remain as-is. Trip hazard slabs will be replaced.**
    - ADA compliant- grading, width, materials
    - Major Streets in commercial/mixed-use:
        - aim for 10’ wide, 6’ min
        - 5’ buffer between sidewalk and street
        - Lighted
    - Major Streets in residential-only:
        - 5’-10’ wide (context-sensitive)
        - 10’-6’ buffer
        - Lighted
    - Local Streets:
        - min of 5’ wide
        - min 6’ buffer.

HARRIET STREET

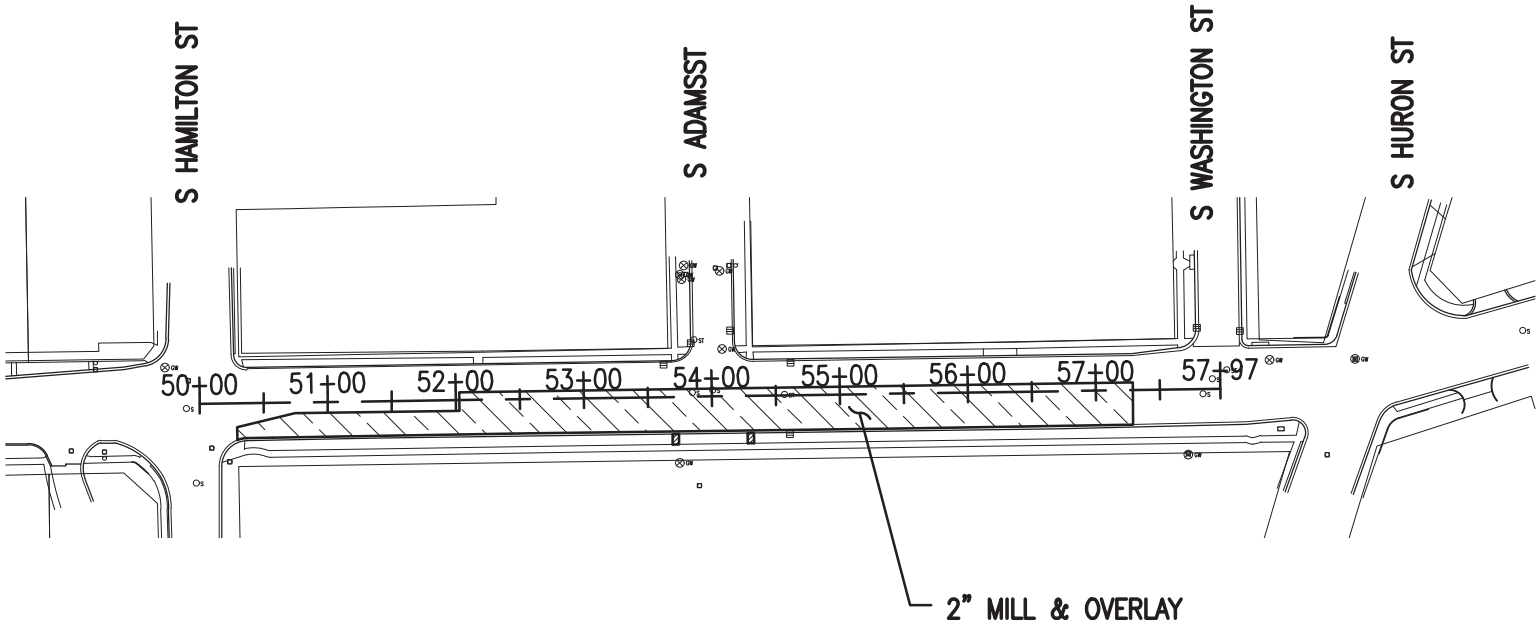

Know what's **below.**
Call before you dig.

2019 ROAD REPAIRS
HARRIET STREET

SCALE
H: 1"150' V: N/A

SHEET
5
OF 20

CLIENT:
CITY OF YPSILANTI

JOB #
0094-18-0020

34000 Plymouth Road | Livonia, MI 48150 | P (734) 522-6711 | F (734) 522-6427 | WWW.OHM-ADVISORS.COM

COPYRIGHT 2017 OHM ALL DRAWINGS AND WRITTEN MATERIALS APPEARING HEREIN CONSTITUTE THE ORIGINAL AND UNPUBLISHED WORK OF OHM AND THE SAME MAY NOT BE DUPLICATED, DISTRIBUTED, OR DISCLOSED WITHOUT PRIOR WRITTEN CONSENT OF OHM

DRAWING PATH: P:\0000_0100\0094180020_2019_FAC\Drawings\Civil\Plans_Const\180020CON.dwg Dec 07, 2018 – 8:57am

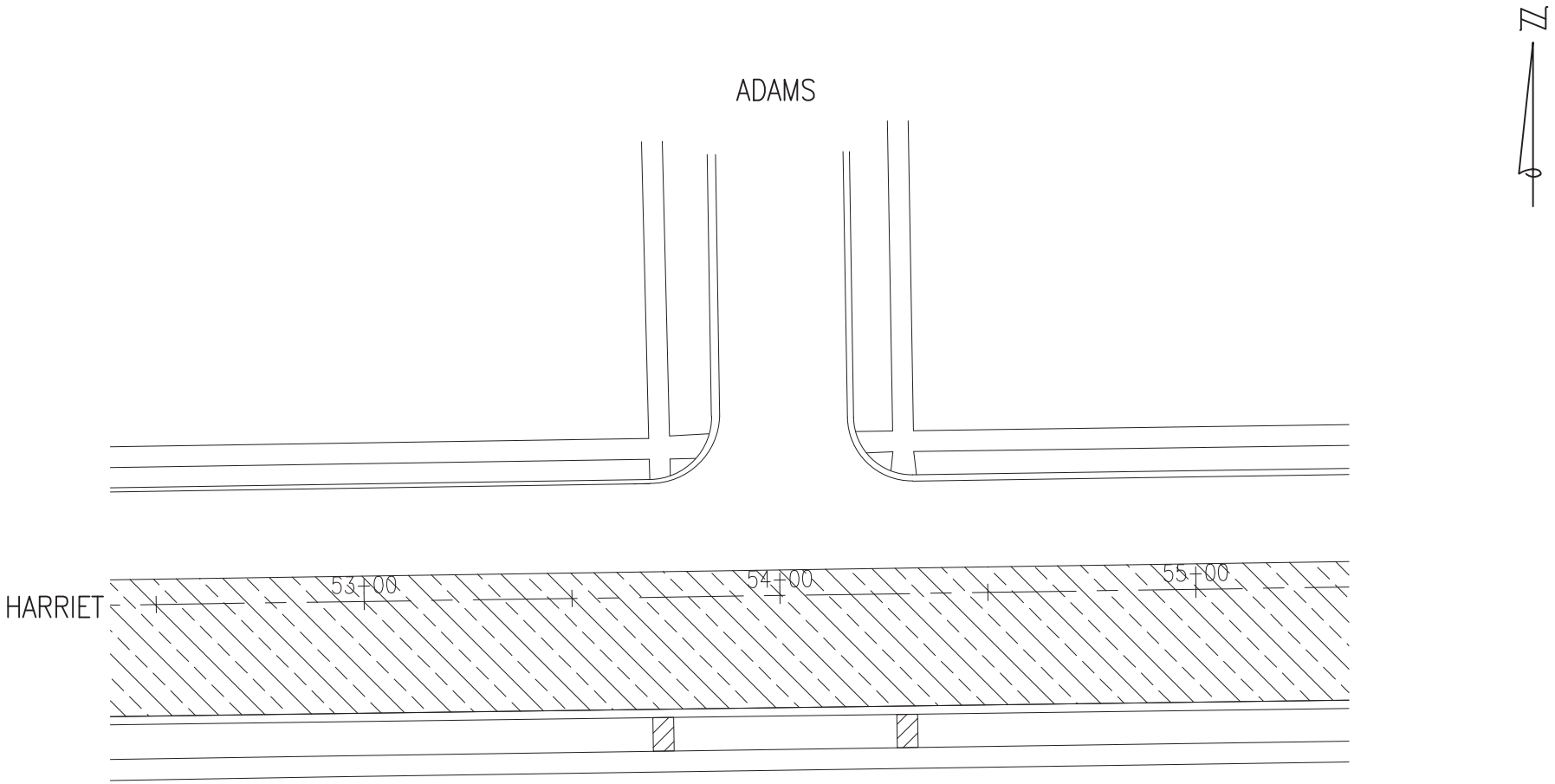

LEGEND

PROP WALK

MILL & OVERLAY

PROP CURB

LOCATION OF DETAIL:
NE, SE, NW, & SW CORNERS
HARRIET & ADAMS

2019 ROAD REPAIRS
PROPOSED CROSSWALK LAYOUT

SCALE
H: NTS V: NTS

SHEET
8
OF 20

CLIENT:
CITY OF YPSILANTI

JOB #
0094-18-0020

34000 Plymouth Road | Livonia, MI 48150 | P (734) 522-6711 | F (734) 522-6427 | WWW.OHM-ADVISORS.COM

COPYRIGHT 2017 OHM ALL DRAWINGS AND WRITTEN MATERIALS APPEARING HEREIN CONSTITUTE THE ORIGINAL AND UNPUBLISHED WORK OF OHM AND THE SAME MAY NOT BE DUPLICATED, DISTRIBUTED, OR DISCLOSED WITHOUT PRIOR WRITTEN CONSENT OF OHM

DRAWING PATH: P:\0000_0100\0094180020_2019_FAC\Drawings\Civil\Details\180020DET_02.dwg Dec 07, 2018 – 8:58am

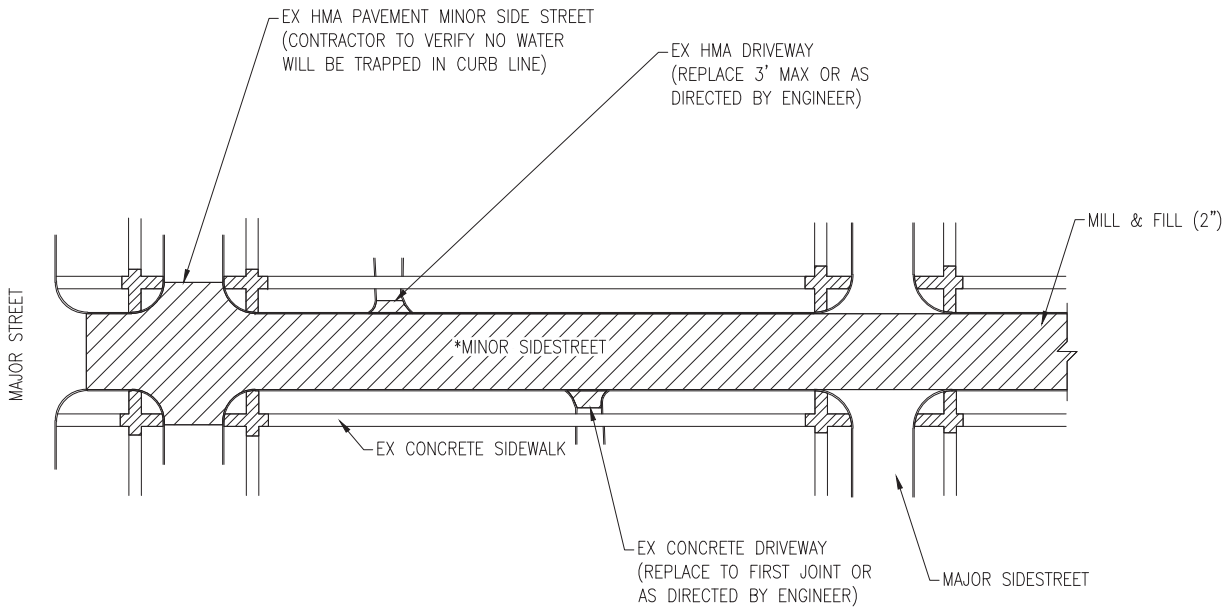

NOTE:
(*) AS SPECIFIED IN LOG OF PROJECT

THE LIMITS OF WORK AS SHOWN ARE FOR INFORMATION PURPOSES ONLY.

THE EXACT LIMITS ARE TO BE DETERMINED BY THE ENGINEER PRIOR TO THE MILLING OR PAVEMENT REMOVAL OPERATION.

AT MAJOR ROAD INTERSECTIONS, THE WORK SHALL STOP PRIOR TO THE MAJOR INTERSECTION RADIUS, UNLESS OTHERWISE DIRECTED BY THE ENGINEER. SUMMIT @ MICHIGAN AND CONGRESS @ MICHIGAN WILL HAVE THE LIMITS EXTENDED TO EDGE OF MAJOR.

REFER TO MDOT STANDARD PLAN R-28 SERIES FOR SIDEWALK RAMP DETAILS.

ONLY DRIVEWAYS SPECIFIED BY THE ENGINEER SHALL BE REPLACED.

PAVEMENT WORK AREA LIMITS

2019 ROAD REPAIRS
WORK LIMITS FOR RESIDENTIAL STREETS AND DRIVEWAY APPROACHES

SCALE
H: NTS V: NTS

SHEET
3

CLIENT:
CITY OF YPSILANTI

JOB #
0094-18-0020

34000 Plymouth Road | Livonia, MI 48150 | P (734) 522-6711 | F (734) 522-6427 | WWW.OHM-ADVISORS.COM

COPYRIGHT 2017 OHM ALL DRAWINGS AND WRITTEN MATERIALS APPEARING HEREIN CONSTITUTE THE ORIGINAL AND UNPUBLISHED WORK OF OHM AND THE SAME MAY NOT BE DUPLICATED, DISTRIBUTED, OR DISCLOSED WITHOUT PRIOR WRITTEN CONSENT OF OHM

DRAWING PATH: P:\0000_0100\0094180020_2019_FAC\Drawings\Civil\Details\180020DET.dwg Dec 07, 2018 – 8:57am

CONGRESS STREET

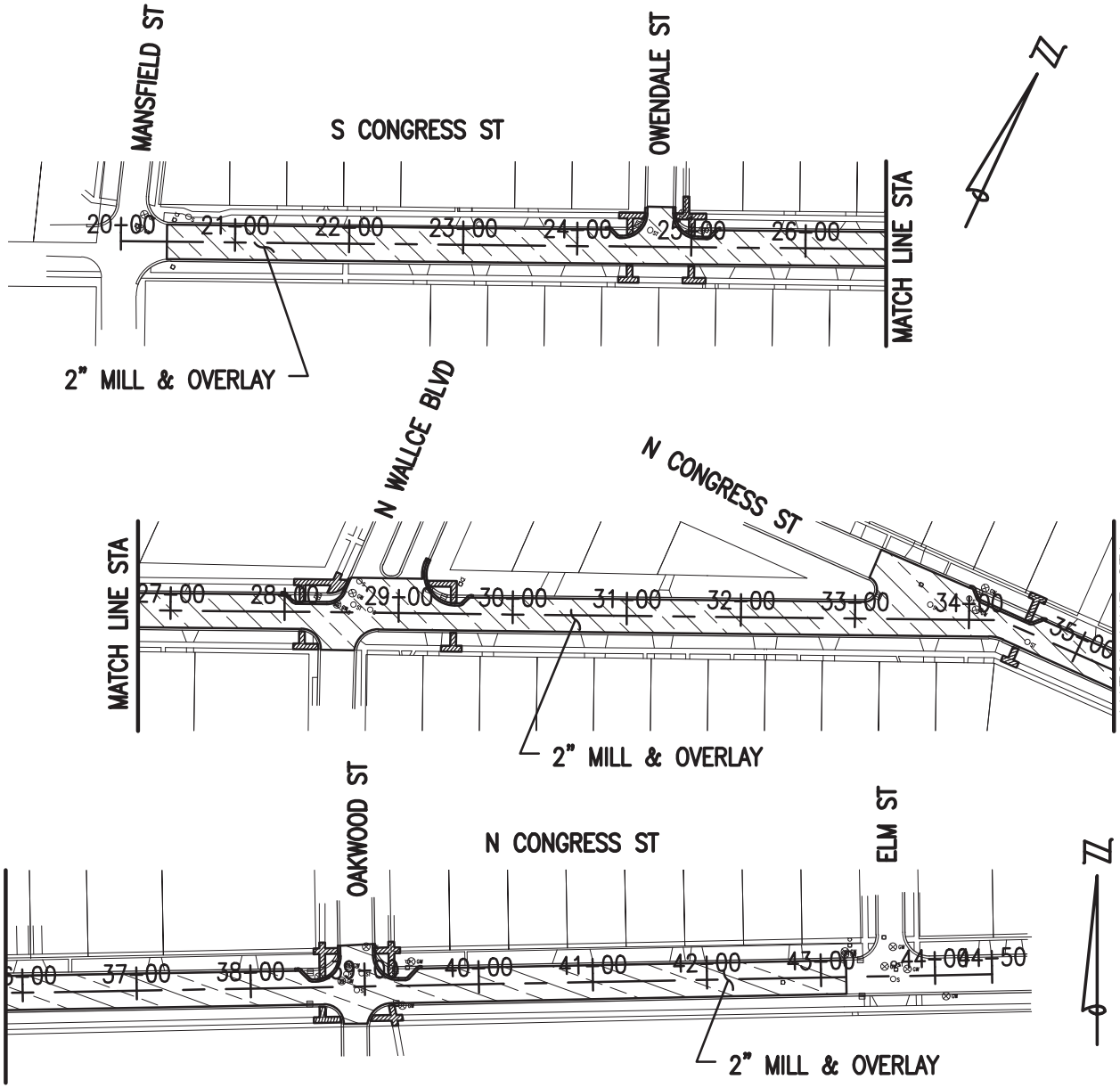

Know what's **below.**
Call before you dig.

2019 ROAD REPAIRS
S. CONGRESS STREET
POB STA 20+40 TO POE STA 43+22

SCALE
H: 1"=150' V: N/A

SHEET
4
OF 20

CLIENT:
CITY OF YPSILANTI

JOB #
0094-18-0020

34000 Plymouth Road | Livonia, MI 48150 | P (734) 522-6711 | F (734) 522-6427 | WWW.OHM-ADVISORS.COM

COPYRIGHT 2017 OHM ALL DRAWINGS AND WRITTEN MATERIALS APPEARING HEREIN CONSTITUTE THE ORIGINAL AND UNPUBLISHED WORK OF OHM AND THE SAME MAY NOT BE DUPLICATED, DISTRIBUTED, OR DISCLOSED WITHOUT PRIOR WRITTEN CONSENT OF OHM

DRAWING PATH: P:\0000_0100\0094180020_2019_FAC\Drawings\Civil\Plans_Const\180020CON.dwg Dec 07, 2018 – 8:57am

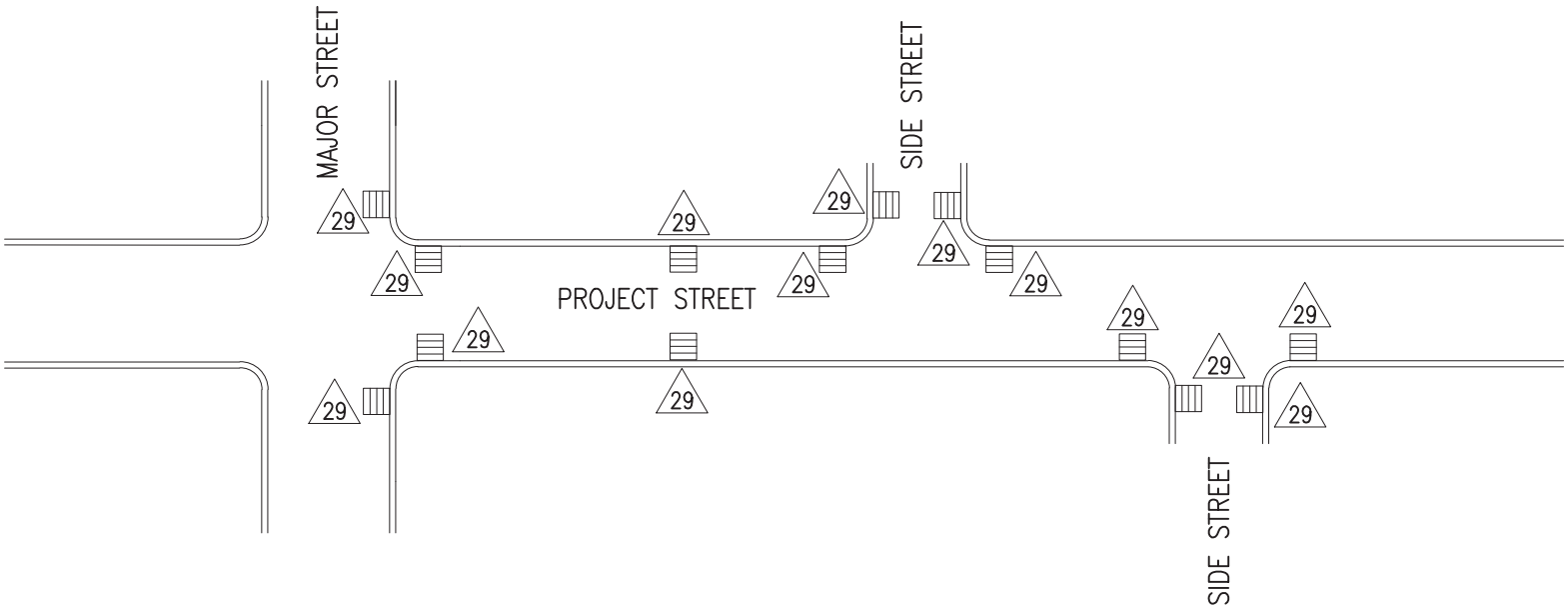

MDOT KEY #	TEMPORARY SESC ITEM DESCRIPTION	UNIT
29	Erosion Control, Inlet Protection, Fabric Drop	Ea

PLACE EROSION CONTROL, INLET PROTECTION, FABRIC DROP AND EROSION CONTROL, INLET PROTECTION, GEOTEXTILE AND STONE ON ALL CATCH BASIN INLETS AS SHOWN. THIS INCLUDES ALL INLETS ON THE PROJECT STREET AS WELL AS ANY INLETS IN SIDESTREET APPROACHES.

EXISTING OR PROPOSED SQUARE CATCH BASIN

2019 ROAD REPAIRS
WORK LIMITS FOR RESIDENTIAL STREETS AND DRIVEWAY APPROACHES

SCALE
H: NTS V: NTS

SHEET
12

CLIENT:
CITY OF YPSILANTI

JOB #
0094-18-0020

34000 Plymouth Road | Livonia, MI 48150 | P (734) 522-6711 | F (734) 522-6427 | WWW.OHM-ADVISORS.COM

COPYRIGHT 2017 OHM ALL DRAWINGS AND WRITTEN MATERIALS APPEARING HEREIN CONSTITUTE THE ORIGINAL AND UNPUBLISHED WORK OF OHM AND THE SAME MAY NOT BE DUPLICATED, DISTRIBUTED, OR DISCLOSED WITHOUT PRIOR WRITTEN CONSENT OF OHM

DRAWING PATH: P:\0000_0100\0094180020_2019_FAC\Drawings\Civil\Details\180020DET.dwg Dec 07, 2018 – 8:58am

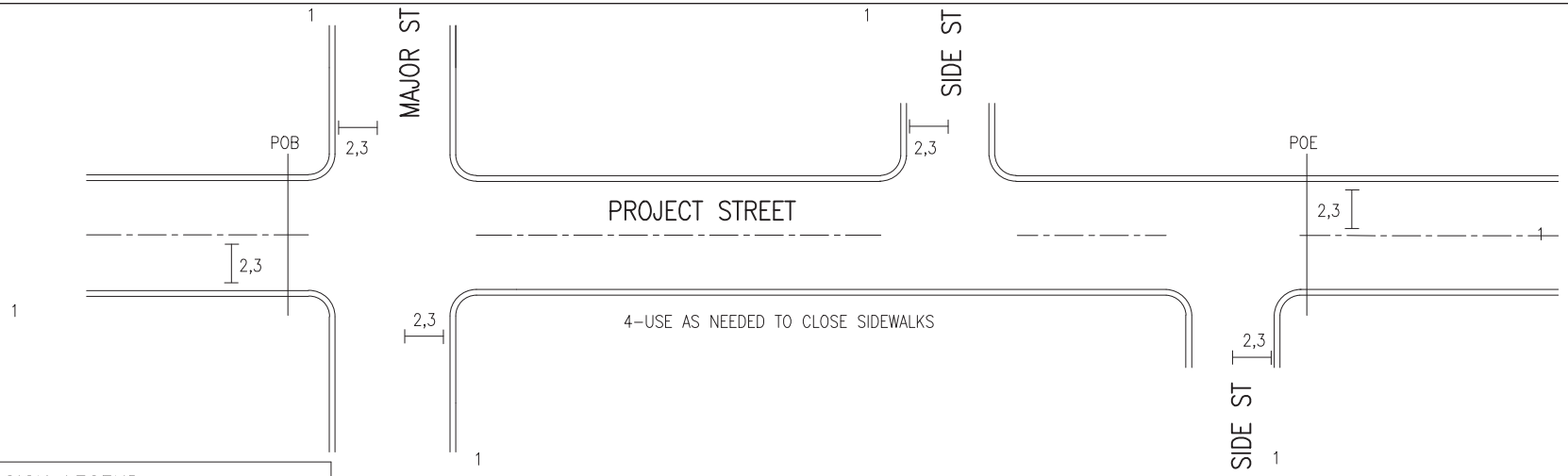

SIGN LEGEND

I.D. NUMBER	SIGN	SIGN DESIGNATION	SIZE	NUMBER REQUIRED
1	ROAD CLOSED AHEAD	W20-3	48x48	6
2		TYPE III BARRICADE	5'x4' (MIN.)	5
3	ROAD CLOSED TO THRU TRAFFIC	R11-4	60x30	5
4	SIDEWALK CLOSED	R9-9	24x12	5
5		W4-2	4x4	4
6	RIGHT LANE CLOSED AHEAD	W20-5R	4x4	4

2019 ROAD REPAIRS
TRAFFIC CONTROL

SCALE
H: NTS V: NTS

SHEET
13
OF 20

CLIENT:
CITY OF YPSILANTI

JOB #
0094-18-0020

34000 Plymouth Road | Livonia, MI 48150 | P (734) 522-6711 | F (734) 522-6427 | WWW.OHM-ADVISORS.COM

COPYRIGHT 2017 OHM ALL DRAWINGS AND WRITTEN MATERIALS APPEARING HEREIN CONSTITUTE THE ORIGINAL AND UNPUBLISHED WORK OF OHM AND THE SAME MAY NOT BE DUPLICATED, DISTRIBUTED, OR DISCLOSED WITHOUT PRIOR WRITTEN CONSENT OF OHM

DRAWING PATH: P:\0000_0100\0094180020_2019_FAC\Drawings\Civil\PMS\180020PMS.dwg Dec 07, 2018 - 8:58am

SIGN LEGEND

I.D. NUMBER	SIGN	SIGN DESIGNATION	NUMBER REQUIRED	LOCATION – HURON	LOCATION – HARRIET	LOCATION – CONGRESS
①	STOP	R1–1 (30"x30") 6.25 Sft TYPE III A 3 lb POST, 14 Ft	–			1–STA 20+50 (L) 1–STA 33+00 (R) 1–STA 25+50 (L) 1–STA 34+60 (L) 1–STA 28+20 (R) 1–STA 37+25 (L)
②	ONE WAY	R6–1R(12"x36") 3.0 Sft TYPE III B 3 lb POST, 14 Ft	–	1–STA 11+80 2–STA 12+10		
③	ALL WAY	R1–3P (6"x18") 0.75 Sft TYPE III A	–			1–STA 20+50 (L) 1–STA 33+00 (R) 1–STA 25+50 (L) 1–STA 34+60 (L) 1–STA 28+20 (R) 1–STA 37+25 (L)
④	SPEED LIMIT 25	R2–1 (24"x30") 5.0 Sft TYPE III B 3 lb POST, 14 Ft	–			1–STA 21+00 (R) 1–STA 24+40 (L) 1–STA 41+50 (L)
⑤	NO PARKING	R8–3a (12"x12") 1.0 Sft TYPE III A 3 lb POST, 14 Ft	–	1–STA 10+25 (R) 1–STA 10+25 (L)		
⑥		R7–201P (6"x12") 0.5 Sft TYPE III A	1	1–STA 10+25 (R) 1–STA 10+25 (L)		
⑦		W11–2 (30"x30") 6.25 Sft TYPE III B 1–3# STEEL POST (16 Ft)	–	1–STA 3+20 (L) 1–STA 9+60 (L)	1–STA 53+60 (L) 1–STA 54+40 (R)	1–STA 24+50 (R) 1–STA 25+00 (L)
⑧						
⑨	SPEED LIMIT 30	R2–1 (24"x30") 5.0 Sft TYPE III B 3 lb POST, 14 Ft			1–STA 1+50	
⑩	⊥	SIGN, TYPE III, ERECT, SALV	–	2–STA 3+20 (R)	2–STA 53+75	2–STA 21+00 (R)
⑪	1 BIKE ROUTE	D11–1 (24"x18") 6.25 Sft, TYPE IIIB 3 lb, 14 Ft	–			
POST A		1–#3 POST (14 Ft)	–	140	56	198
	OWENDALE	D3–1 (8") (24"x8")				2–STA 25+50 (L)
	CONGRESS	D3–1 (8") (24"x8")				
		W16–7PL (24"x12") ___ Sft, TYPE IIIB			1–STA 53+60 (R) 1–STA 54+40 (L)	1–STA 25+00 (R) 1–STA 25+00 (L)
		W16–7PR (24"x12") ___ Sft, TYPE IIIB			1–STA 53+60 (R) 1–STA 54+40 (L)	1–STA 25+00 (R) 1–STA 25+00 (L)

2019 ROAD REPAIRS
TRAFFIC SIGNS

SCALE
H: NTS V: NTS

SHEET
14
OF 20

CLIENT:
CITY OF YPSILANTI

JOB #
0094-18-0020

34000 Plymouth Road | Livonia, MI 48150 | P (734) 522-6711 | F (734) 522-6427 | WWW.OHM-ADVISORS.COM

COPYRIGHT 2017 OHM ALL DRAWINGS AND WRITTEN MATERIALS APPEARING HEREIN CONSTITUTE THE ORIGINAL AND UNPUBLISHED WORK OF OHM AND THE SAME MAY NOT BE DUPLICATED, DISTRIBUTED, OR DISCLOSED WITHOUT PRIOR WRITTEN CONSENT OF OHM

DRAWING PATH: P:\0000_0100\0094180020_2019_FAC\Drawings\Civil\PMS\180020PMS.dwg Dec 07, 2018 – 8:58am

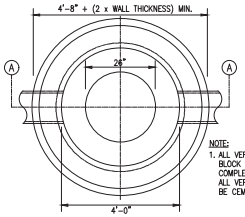

NOTE:
1. ALL VERTICAL HOLES IN CONCRETE BLOCK STRUCTURE WALL SHALL BE COMPLETELY FILLED WITH MORTAR. ALL VERTICAL WALL JOINTS SHALL BE CEMENT POINTED.

PLAN VIEW

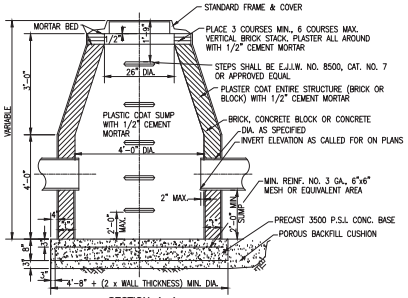

SECTION A–A
CATCH BASIN "A"

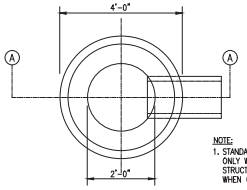

NOTE:
1. STANDARD INLET WILL BE USED ONLY WHEN OUTLETTING TO A STRUCTURE HAVING A SUMP OR WHEN OUTLETTING TO A DITCH

PLAN VIEW

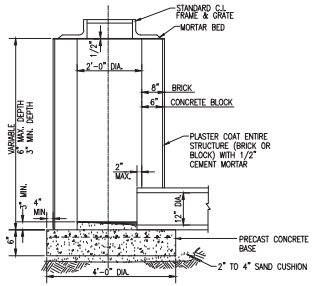

SECTION A–A
STANDARD INLET

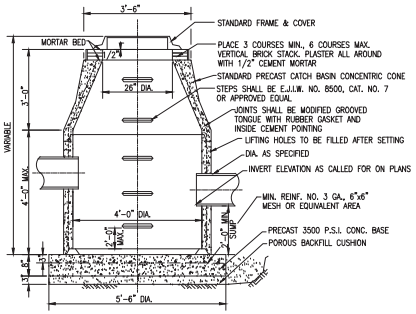

CROSS–SECTION
CATCH BASIN "B"

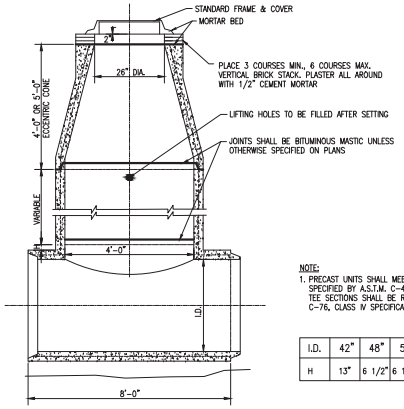

NOTE:
1. PRECAST UNITS SHALL MEET THE REQUIREMENTS SPECIFIED BY A.S.T.M. C-478-68. ALL MANHOLE TEE SECTIONS SHALL BE REINFORCED TO A.S.T.M. C-76, CLASS IV SPECIFICATIONS

H DIMENSION

I.D.	42"	48"	54"	60"	66"	72"	78"	84"	OVER 84"
H	13"	6 1/2"	6 1/2"	1"	1 3/4"	2 1/2"	4"	6"	7"

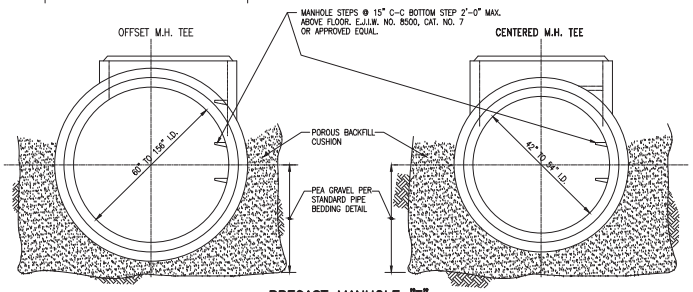

PRECAST MANHOLE "T"

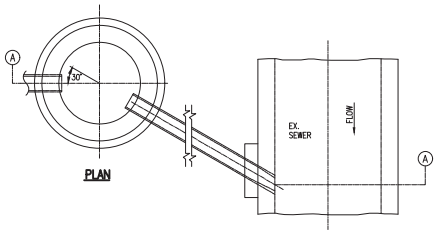

PLAN

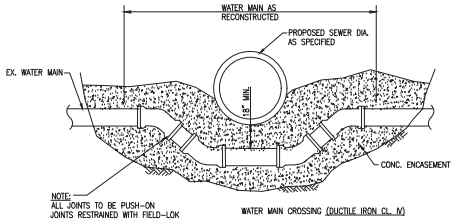

NOTE:
ALL JOINTS TO BE PUSH-ON JOINTS RESTRAINED WITH FIELD-LOK GASKET OR APPROVED EQUAL

WATER MAIN CROSSING

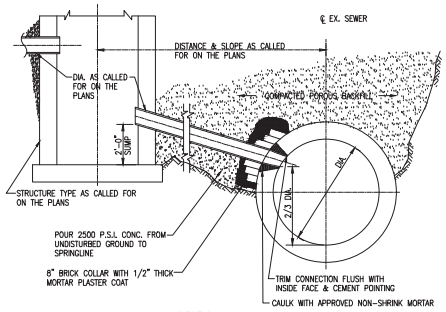

SECTION A–A
TYPICAL CONNECTIONS TO EXISTING SEWERS

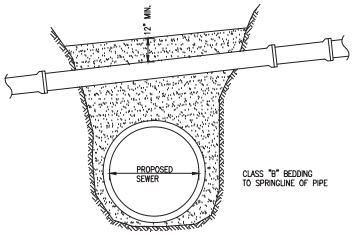

HOUSE CONNECTION CROSSING

NOTE:
1. M.D.O.T. GRANULAR MATERIAL CLASS II PLACED IN 6" LAYERS AND COMPACTED TO A MINIMUM OF 95% OF ITS MAXIMUM UNIT WEIGHT TO A HEIGHT OF 12" ABOVE THE TOP OF THE SEWER LEAD.

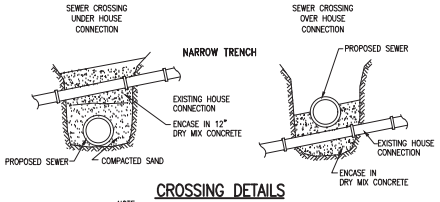

CROSSING DETAILS

NOTE:
1. WHEN UNSTABLE GROUND CONDITIONS ARE ENCOUNTERED STONE, SLAG OR DRY MIX CONCRETE SHALL BE USED TO BACKFILL THE TRENCH TO A HEIGHT 12" ABOVE THE TOP OF THE SEWER LEAD.

2019 ROAD REPAIRS
STANDARD DETAILS

SCALE
H: NTS V: NTS

SHEET
15
OF 20

CLIENT:
CITY OF YPSILANTI

JOB #
0094-18-0020

34000 Plymouth Road | Livonia, MI 48150 | P (734) 522-6711 | F (734) 522-6427 | WWW.OHM-ADVISORS.COM

COPYRIGHT 2017 OHM ALL DRAWINGS AND WRITTEN MATERIALS APPEARING HEREIN CONSTITUTE THE ORIGINAL AND UNPUBLISHED WORK OF OHM AND THE SAME MAY NOT BE DUPLICATED, DISTRIBUTED, OR DISCLOSED WITHOUT PRIOR WRITTEN CONSENT OF OHM

DRAWING PATH: P:\0000_0100\0094180020_2019_FAC\Drawings\Civil\Details\180020DET_STD.dwg Dec 07, 2018 – 8:58am

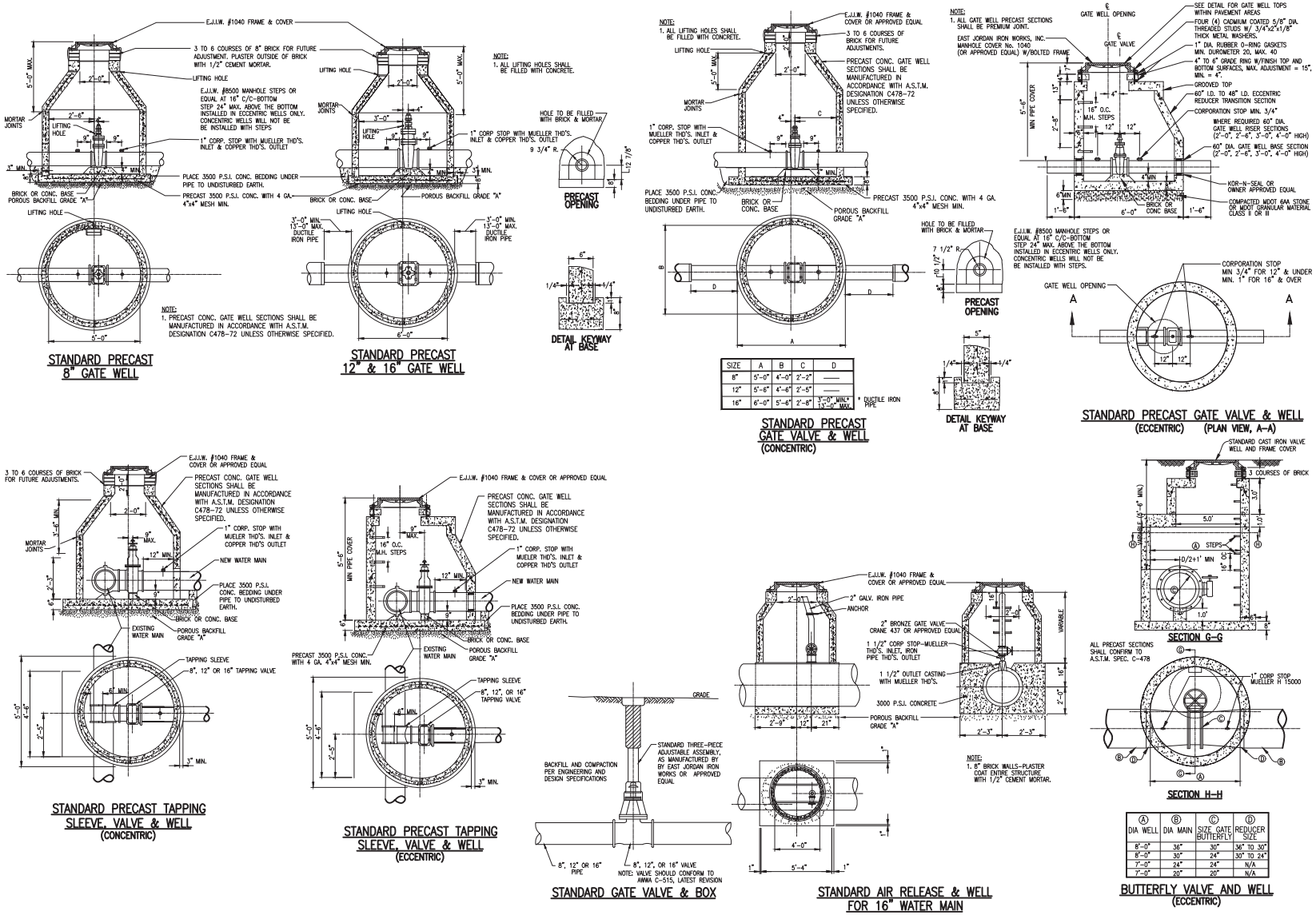

SIZE	A	B	C	D
8"	5'-0"	4'-0"	2'-2"	——
12"	5'-6"	4'-6"	2'-5"	——
16"	6'-0"	5'-6"	2'-8"	3'-0" MIN.* 13'-0" MAX.

Ⓐ DIA WELL	Ⓑ DIA MAIN	Ⓒ SIZE GATE BUTTERFLY	Ⓓ REDUCER SIZE
8'-0"	36"	30"	36" TO 30"
8'-0"	30"	24"	30" TO 24"
7'-0"	24"	24"	N/A
7'-0"	20"	20"	N/A

2019 ROAD REPAIRS
STANDARD DETAILS

SCALE
H: NTS V: NTS

SHEET
16
OF 20

CLIENT:
CITY OF YPSILANTI

JOB #
0094-18-0020

34000 Plymouth Road | Livonia, MI 48150 | P (734) 522-6711 | F (734) 522-6427 | WWW.OHM-ADVISORS.COM

COPYRIGHT 2017 OHM ALL DRAWINGS AND WRITTEN MATERIALS APPEARING HEREIN CONSTITUTE THE ORIGINAL AND UNPUBLISHED WORK OF OHM AND THE SAME MAY NOT BE DUPLICATED, DISTRIBUTED, OR DISCLOSED WITHOUT PRIOR WRITTEN CONSENT OF OHM

DRAWING PATH: P:\0000_0100\0094180020_2019_FAC\Drawings\Civil\Details\180020DET_STD.dwg Dec 07, 2018 - 8:58am

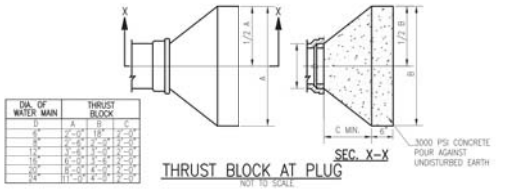

DIA. OF WATER MAIN	THRUST BLOCK A	B	C
6"	2'-0"	1'-0"	1'-0"
8"	2'-0"	1'-0"	1'-0"
12"	4'-0"	2'-0"	2'-0"
16"	6'-0"	3'-0"	3'-0"
20"	8'-0"	4'-0"	4'-0"
24"	11'-0"	4'-0"	5'-0"

THRUST BLOCK AT PLUG
NOT TO SCALE

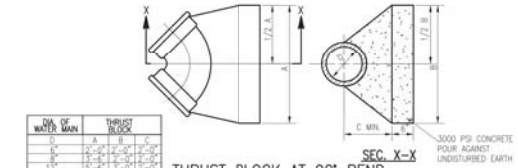

DIA. OF WATER MAIN	THRUST BLOCK A	B	C
6"	2'-0"	1'-0"	1'-0"
8"	3'-0"	1'-0"	1'-0"
12"	5'-0"	2'-0"	2'-0"
16"	6'-0"	3'-0"	3'-0"
20"	8'-0"	4'-0"	4'-0"
24"	9'-0"	4'-0"	5'-0"

THRUST BLOCK AT 90° BEND
NOT TO SCALE

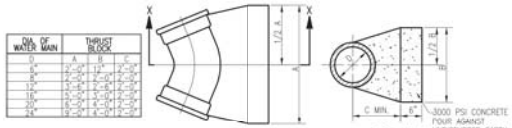

DIA. OF WATER MAIN	THRUST BLOCK A	B	C
6"	2'-0"	1'-0"	1'-0"
8"	3'-0"	1'-0"	1'-0"
12"	5'-0"	2'-0"	2'-0"
16"	6'-0"	3'-0"	3'-0"
20"	8'-0"	4'-0"	4'-0"
24"	10'-0"	4'-0"	5'-0"

THRUST BLOCK AT 45° BEND
NOT TO SCALE

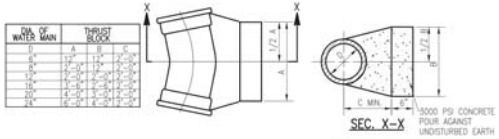

DIA. OF WATER MAIN	THRUST BLOCK A	B	C
6"	1'-6"	1'-0"	1'-0"
8"	2'-0"	1'-0"	1'-0"
12"	3'-0"	2'-0"	2'-0"
16"	4'-0"	2'-0"	2'-0"
20"	5'-0"	2'-0"	2'-0"
24"	6'-0"	2'-0"	2'-0"

THRUST BLOCK AT 22 1/2° BEND
NOT TO SCALE

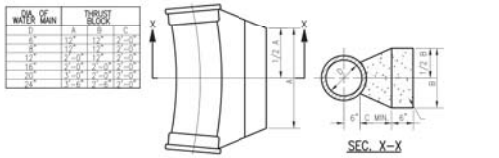

DIA. OF WATER MAIN	THRUST BLOCK A	B	C
6"	1'-0"	1'-0"	1'-0"
8"	1'-6"	1'-0"	1'-0"
12"	2'-0"	1'-0"	1'-0"
16"	2'-0"	1'-0"	1'-0"
20"	2'-0"	2'-0"	1'-0"
24"	3'-0"	2'-0"	1'-0"

THRUST BLOCK AT 11 1/4° BEND
NOT TO SCALE

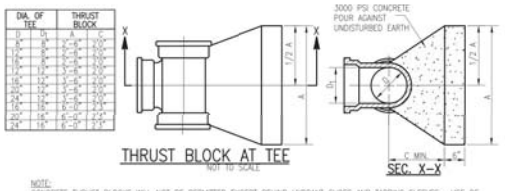

DIA. OF TEE	THRUST BLOCK A	B	C
6"	6"	1'-0"	1'-0"
8"	8"	1'-0"	1'-0"
12"	12"	1'-6"	1'-0"
16"	17"	2'-0"	1'-0"
20"	21"	2'-6"	1'-0"
24"	25"	3'-0"	1'-0"
30"	32"	3'-6"	2'-0"
36"	38"	4'-0"	2'-0"
42"	46"	4'-6"	2'-0"
48"	54"	5'-0"	2'-0"

THRUST BLOCK AT TEE
NOT TO SCALE

NOTE:
CONCRETE THRUST BLOCKS WILL NOT BE PERMITTED EXCEPT BEHIND HYDRANT SHOES AND TAPPING SLEEVES. USE OF CONCRETE THRUST BLOCKS IN OTHER LOCATIONS WILL NOT BE PERMITTED WITHOUT THE WRITTEN APPROVAL OF YCUA.

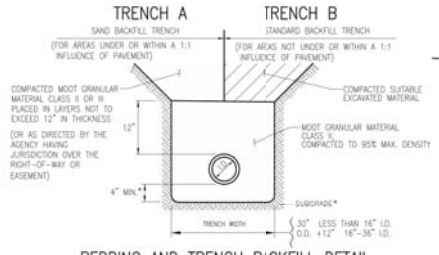

BEDDING AND TRENCH BACKFILL DETAIL FOR WATER MAIN
NOT TO SCALE

*NOTE: IF THE EXISTING SUBGRADE MATERIAL MEETS THE REQUIREMENTS FOR MDOT GRANULAR MATERIAL CLASS II (MINIMUM 4" THICK), THEN THE WATER MAIN MAY BE LAID DIRECTLY ON THE COMPACTED EXISTING SUBGRADE MATERIAL.

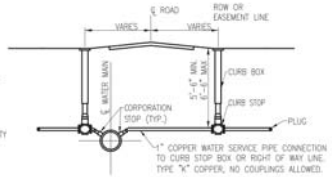

TYPICAL WATER SERVICE
NOT TO SCALE

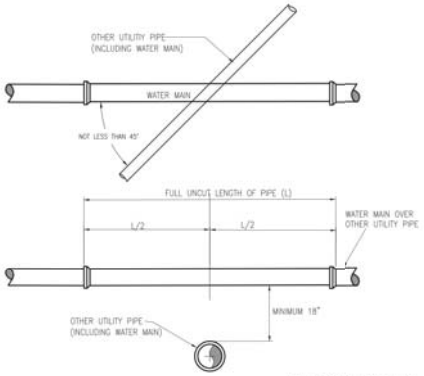

VERTICAL SEPARATION
NOTE: SEPARATION REQUIREMENTS APPLY REGARDLESS OF VERTICAL ALIGNMENTS OF UTILITIES

WATER MAIN CROSSING OTHER UTILITIES

HORIZONTAL SEPARATION
NOT TO SCALE

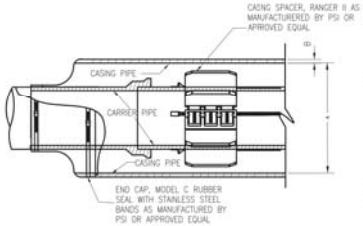

STANDARD CASING SECTION
NOT TO SCALE

NOTES:
1. NO WATER SHALL BE USED IN BORING UNDER RAILROADS.
2. MAINTAIN MIN. OF 5'-6" OF COVER BETWEEN BASE OF RAIL & TOP OF CASING.
3. THE ENDS OF THE CASING SHALL BE SUITABLY PRITECTED AGAINST THE ENTRANCE OF FOREIGN MATERIAL, BUT SHALL NOT BE TIGHTLY SEALED.
4. CASING SPACERS AND END SEALS SHALL BE INSTALLED IN ACCORDANCE WITH MANFACTURER'S RECOMMENDATIONS

DIA. OF WATER MAIN	MIN. O.D. A	ROAD CROSSING MIN. B	RAILROAD CROSSING MIN. B
6"	14"	0.250"	0.312"
8"	16"	0.250"	0.375"
12"	20"	0.250"	0.438"
16"	24"	0.250"	0.500"
20"	30"	0.312"	0.500"
24"	36"	0.375"	0.500"

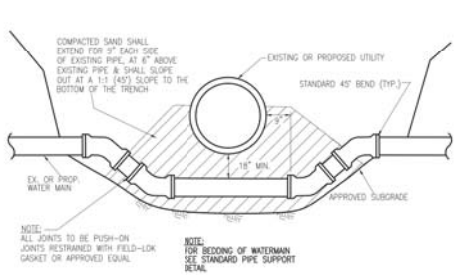

WATER MAIN LOWERING
NOT TO SCALE

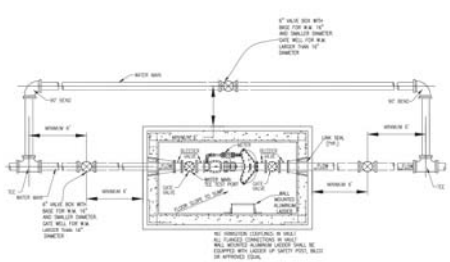

MASTER METER VAULT CONFIGURATION (WITHOUT COVER)
NOT TO SCALE

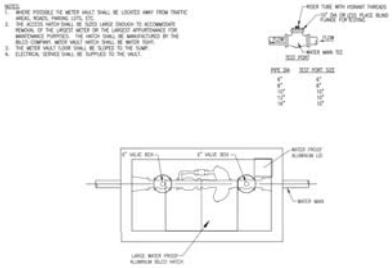

MASTER METER VAULT CONFIGURATION WITH COVER
NOT TO SCALE

2019 ROAD REPAIRS
STANDARD DETAILS

SCALE
H: NTS V: NTS

SHEET
17
OF 20

CLIENT:
CITY OF YPSILANTI

JOB #
0094-18-0020

34000 Plymouth Road | Livonia, MI 48150 | P (734) 522-6711 | F (734) 522-6427 | WWW.OHM-ADVISORS.COM

COPYRIGHT 2017 OHM ALL DRAWINGS AND WRITTEN MATERIALS APPEARING HEREIN CONSTITUTE THE ORIGINAL AND UNPUBLISHED WORK OF OHM AND THE SAME MAY NOT BE DUPLICATED, DISTRIBUTED, OR DISCLOSED WITHOUT PRIOR WRITTEN CONSENT OF OHM

DRAWING PATH: P:\0000_0100\0094180020_2019_FAC\Drawings\Civil\Details\180020DET_STD.dwg Dec 07, 2018 - 8:58am

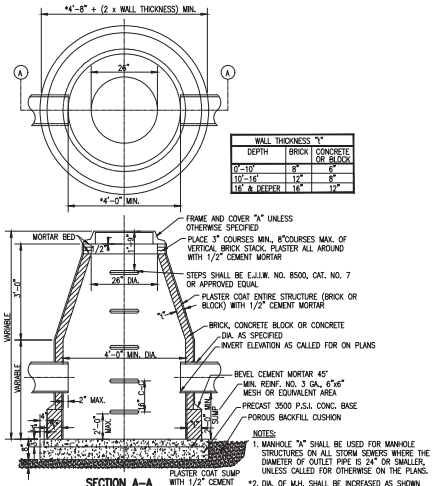

WALL THICKNESS "t"		
DEPTH	BRICK	CONCRETE OR BLOCK
0'-10'	8"	6"
10'-16'	12"	8"
16' & DEEPER	16"	12"

NOTES:
1. MANHOLE "A" SHALL BE USED FOR MANHOLE STRUCTURES ON ALL STORM SEWERS WHERE THE DIAMETER OF OUTLET PIPE IS 24" OR SMALLER, UNLESS CALLED FOR OTHERWISE ON THE PLANS.
*2. DIA. OF M.H. SHALL BE INCREASED AS SHOWN ON THE PLANS OR IN THE PROPOSAL DEPENDING ON THE DIAMETERS AND ANGLES OF THE SEWERS.

SECTION A–A
MANHOLE "A"

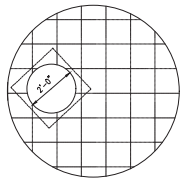

TOP SLAB

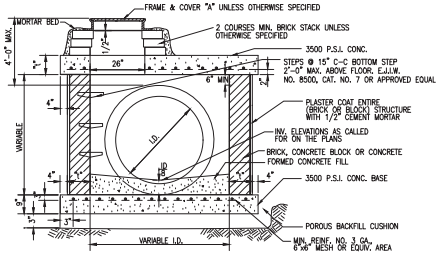

OUTLET I.D.	M.H. D	TOP SLAB "T"	WALLS "t"	REINFORCING STEEL (SLAB)
24" OR LESS	4'-0"	9"	8"	3/4" @ 9" EACH WAY
30"	*4'-0"	9"	8"	3/4" @ 9" EACH WAY
36"	*4'-0"	9"	12"	3/4" @ 9" EACH WAY
42"	*5'-0"	10"	12"	3/4" @ 9" EACH WAY
48" 54"	*6'-0"	11"	12"	7/8" @ 9" EACH WAY

M.H. D	TOP SLAB "T"	WALLS "t"	REINFORCING STEEL (SLAB)
7'-0"	12"	12"	7/8" @ 9" EACH WAY
8'-0"	12"	12"	1" @ 9" EACH WAY

NOTES:
*1. DIA. SHALL BE INCREASED AS SHOWN ON PLANS OR IN THE PROPOSAL DEPENDING ON THE ANGLE OF THE SEWERS.
2. MH. "D" SHALL BE USED WHERE THE DEPTH OF COVER FROM THE TOP OF CASTING TO THE TOP OF SEWER IS LESS THAN 4'-0". MH. "D" SHALL BE CONSTRUCTED WITH A 2' SUMP WHERE DIAMETER OF OUTLET SEWER IS 24" OR LESS.

TYPICAL SECTION
MANHOLE "D"

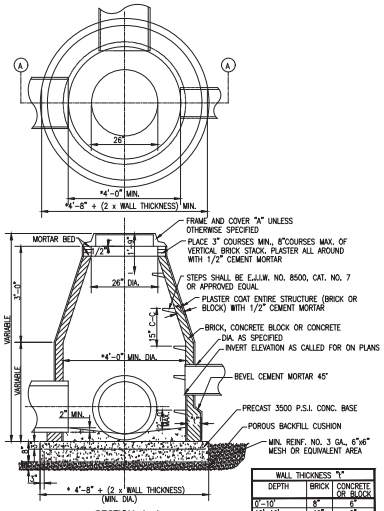

WALL THICKNESS "t"		
DEPTH	BRICK	CONCRETE OR BLOCK
0'-10'	8"	6"
10'-16'	12"	8"
16' & DEEPER	16"	12"

SECTION A–A
MANHOLE "B"

NOTES:
1. MANHOLE "B" SHALL BE USED FOR MANHOLE STRUCTURES ON ALL STORM SEWERS WHERE THE DIAMETER OF OUTLET PIPE IS 24" OR SMALLER, UNLESS CALLED FOR OTHERWISE ON THE PLANS.
*2. DIA. OF M.H. SHALL BE INCREASED AS SHOWN ON THE PLANS OR IN THE PROPOSAL DEPENDING ON THE DIAMETERS AND ANGLES OF THE SEWERS.

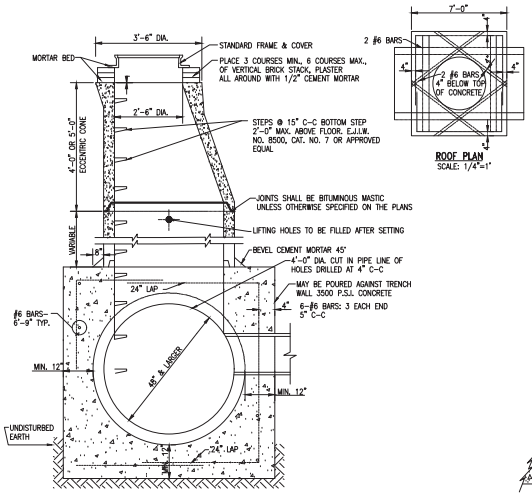

ROOF PLAN
SCALE: 1/4"=1'

TYPICAL SECTION
PRECAST MANHOLE "C"

NOTES:
1. MANHOLE "C" SHALL BE USED FOR MANHOLE STRUCTURES ON ALL STORM SEWERS WHERE 48" OR LARGER DIA. PIPES INTERSECT.
2. PRECAST UNITS SHALL MEET THE REQUIREMENTS SPECIFIED BY A.S.T.M. C-478-68.

GENERAL NOTES FOR
STORM SEWER MANHOLES

1. ALL MATERIALS AND WORKMANSHIP SHALL BE IN ACCORDANCE WITH THE CURRENT STANDARDS AND SPECIFICATIONS OF THE TOWNSHIP OF YPSILANTI AND YCUA.
2. CONTRACTOR SHALL CONSTRUCT MANHOLES WITH PRECAST REINFORCED CONCRETE UNITS ("E", "F", AND "J") IN LIEU OF CONCRETE, BRICK AND BLOCK MANHOLES ("A" AND "B") IN ACCORDANCE WITH THE FOLLOWING CONDITIONS:
   A. MAXIMUM DIAMETER OF SEWER OUTLET IN ANY PRECAST UNIT SHALL BE 18" (MANHOLE "E" ONLY).
   B. NO OPENINGS SHALL BE MADE IN PRECAST UNITS WHICH WOULD LEAVE LESS THAN 24" OF UNDISTURBED PRECAST PIPE OR WOULD REMOVE MORE THAN 30% OF THE CIRCUMFERENCE ALONG ANY HORIZONTAL PLANE.
   C. STRUCTURES FOR SEWERS LARGER THAN 18", OR THOSE NOT MEETING THE OPENING REQUIREMENTS, SHALL BE BUILT OF BLOCK OR BRICK UP TO A MINIMUM OF 8" ABOVE THE TOP OF SEWER, WITH PRECAST UNITS BEING USED ABOVE THIS POINT. WHERE PRECAST UNITS REST ON THE BLOCK OR BRICK, THE GROOVE IN THE PRECAST UNIT SHALL BE FILLED WITH MORTAR.
   D. OPENINGS FOR THE OUTLET SEWER SHALL BE PRECAST WITH A DIAMETER OF 3 INCHES LARGER THAN THE OUTSIDE DIAMETER OF THE OUTLET PIPE. ALL OTHER OPENINGS SHALL BE MADE IN THE FIELD AFTER MANHOLE HAS BEEN CONSTRUCTED.
3. ALL VERTICAL OPENINGS IN CONCRETE BLOCK STRUCTURE WALLS SHALL BE COMPLETELY FILLED WITH MORTAR. ALL VERTICAL WALL JOINTS SHALL BE CEMENT POINTED.
4. A "POURED 3500 P.S.I. CONCRETE BASE" WITHOUT STEEL REINFORCEMENT MAY BE SUBSTITUTED FOR PRECAST BASE WHEN APPROVED BY THE TOWNSHIP ENGINEER. A POROUS BACKFILL CUSHION WILL NOT BE REQUIRED UNDER THE POURED BASE UNLESS CONTRACTOR HAS EXCAVATED BELOW THE REQUIRED ELEVATION, AT WHICH TIME THE ENGINEER WILL DECIDE AS TO THE MERITS OF INCREASING THE THICKNESS OF THE CONCRETE BASE OR THE USE OF A POROUS BACKFILL CUSHION.
5. WHERE UNSTABLE GROUND CONDITIONS ARE ENCOUNTERED, SLAG OR STONE BEDDING SHALL BE USED AS DIRECTED BY THE ENGINEER IN ORDER TO PROVIDE A STABLE FOUNDATION FOR PIPE AND MANHOLES.
6. ALL PIPES ENTERING OR LEAVING A MANHOLE SHALL BE ADEQUATELY SUPPORTED BY POURING 2500 P.S.I. CONCRETE FILL FROM UNDISTURBED EARTH TO SPRINGLINE.
7. WHEREVER EXISTING MANHOLES OR SEWER PIPE ARE TO BE TAPPED, DRILL HOLES AT 4" CENTER TO CENTER AROUND PERIPHERY OR OPENING TO CREATE A PLANE OF WEAKNESS BEFORE BREAKING SECTION OUT.

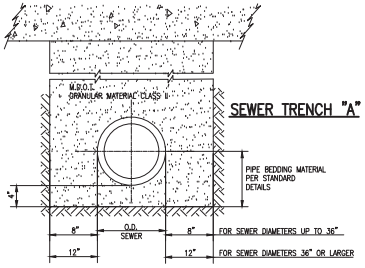

SEWER TRENCH "A"

NOTES:
1. TRENCH "A" SHALL BE USED UNDER ROAD SURFACES, PAVEMENT, SIDEWALK, CURB, AGGREGATE & PAVED DRIVES AND WHERE THE EDGE OF TRENCH IS WITHIN 3 FEET OF THE PAVEMENT
2. GRANULAR MATERIAL SHALL BE PLACED BY THE "CONTROLLED DENSITY METHOD" OR OTHER MEANS HAVING APPROVAL OF THE ENGINEER AND IS TO BE COMPACTED TO 95% OF MAXIMUM UNIT WEIGHT

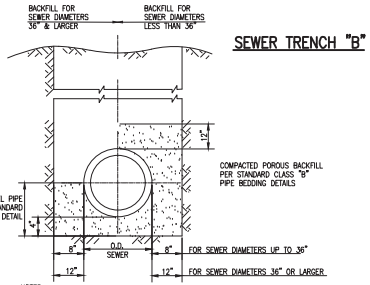

SEWER TRENCH "B"

NOTES:
1. SUITABLE EXCAVATED BACKFILL MATERIAL SHALL BE PLACED IN ONE FOOT LAYERS AND COMPACTED BY MECHANICAL TAMPING OR OTHER EFFECTIVE MEANS HAVING APPROVAL OF THE ENGINEER, TO A DENSITY EQUIVALENT TO THE UNDISTURBED ADJACENT SOIL
2. TRENCH "B" SHALL BE USED UNDER CONDITIONS OTHER THAN SPECIFIED FOR TRENCH "A"

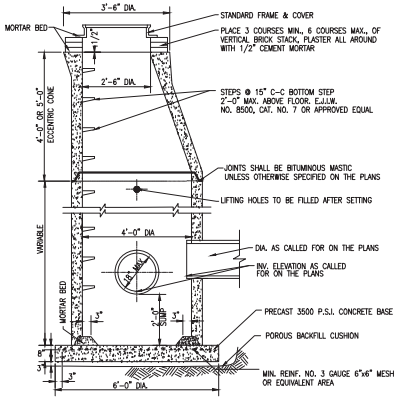

TYPICAL SECTION
PRECAST MANHOLE "E"

NOTES:
1. THIS MANHOLE SHALL BE USED ONLY WHEN MEETING CONDITIONS STATED IN THE "GENERAL MANHOLE NOTES", ITEM NO. 2A
2. PRECAST UNITS SHALL MEET THE REQUIREMENTS SPECIFIED BY A.S.T.M. C-478-68.

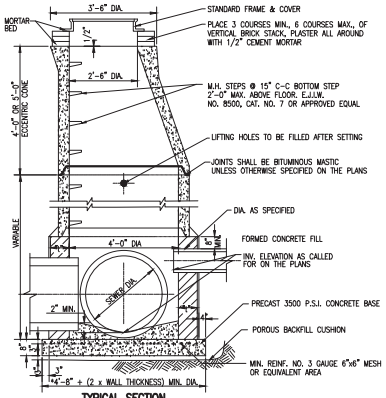

WALL THICKNESS "t"		
DEPTH	BRICK	CONCRETE OR BLOCK
0'-10'	8"	6"
10'-16'	12"	8"
16' & DEEPER	16"	12"

TYPICAL SECTION
PRECAST MANHOLE "F"

NOTES:
1. THIS MANHOLE SHALL BE USED ONLY WHEN MEETING CONDITIONS STATED IN THE "GENERAL MANHOLE NOTES", ITEM NO. 2A
2. PRECAST UNITS SHALL MEET REQUIREMENTS SPECIFIED BY A.S.T.M. C-478-68.
*3. DIAMETER OF MANHOLE SHALL BE INCREASED AS SHOWN ON PLANS OR IN THE PROPOSAL, DEPENDING ON THE DIAMETERS AND ANGLES OF THE SEWERS.

2019 ROAD REPAIRS
STANDARD DETAILS

SCALE
H: NTS V: NTS

SHEET
18
OF 20

CLIENT:
CITY OF YPSILANTI

JOB #
0094-18-0020

34000 Plymouth Road | Livonia, MI 48150 | P (734) 522-6711 | F (734) 522-6427 | WWW.OHM-ADVISORS.COM

COPYRIGHT 2017 OHM ALL DRAWINGS AND WRITTEN MATERIALS APPEARING HEREIN CONSTITUTE THE ORIGINAL AND UNPUBLISHED WORK OF OHM AND THE SAME MAY NOT BE DUPLICATED, DISTRIBUTED, OR DISCLOSED WITHOUT PRIOR WRITTEN CONSENT OF OHM

DRAWING PATH: P:\0000_0100\0094180020_2019_FAC\Drawings\Civil\Details\180020DET_STD.dwg Dec 07, 2018 – 8:59am

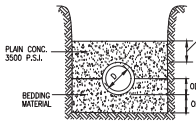

LOAD FACTORS
2.8 PLAIN CONC.
OD + 8" MIN.
11/4 OD

CLASS A

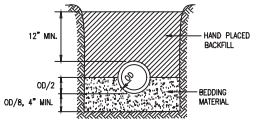

LOAD FACTOR
1.9

CLASS B

MAX. WIDTH OF TRENCH 12" ABOVE TOP OF PIPE
6" THRU 12" PIPE 30" WIDE
15" THRU 36" PIPE – OD+16"
42" THRU 60" PIPE – OD+20"
OVER 60" PIPE OUTSIDE DIA. OF PIPE+24"
MIN. WIDTH OF TRENCH 12" ABOVE THE TOP OF THE PIPE SHALL BE 6" ON EACH SIDE OF PIPE.

PIPE BEDDING DETAILS

DOG HOUSE CUT OUT SIZES	
SEWER SIZE	MAX. CUT OUT SIZE
8" THRU 10"	17 1/2"
12" THRU 15"	20"

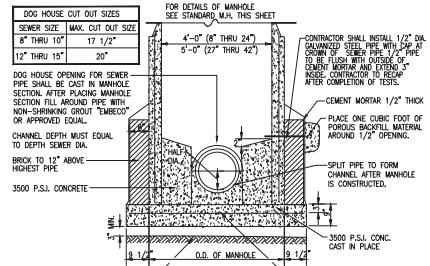

STANDARD SANITARY MANHOLE
ON EXISTING SEWERS 10" THRU 42"

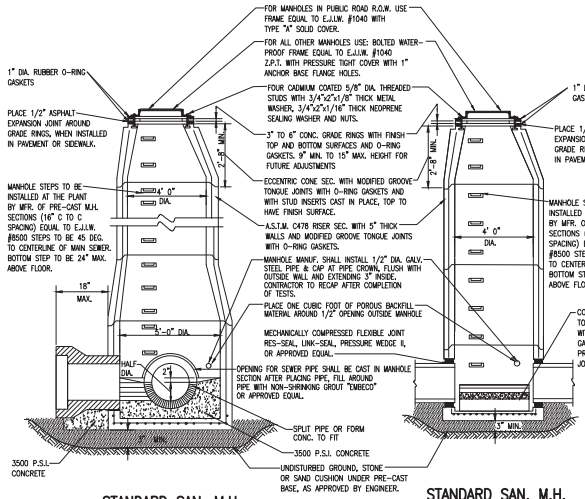

STANDARD SAN. M.H.
FOR SEWERS 27" THRU 42"

STANDARD SAN. M.H.
FOR SEWERS 10" THRU 24"

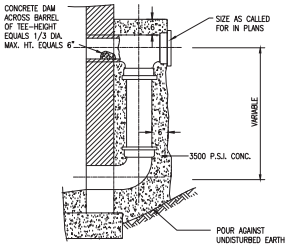

EXTERNAL DROP CONNECTION

DIA. OF SEWER	DIA. OF DROP CONNECTION
8" & 10"	8"
12",15" & 18"	12"
21",24" & 30"	18"
36" & 42"	24"

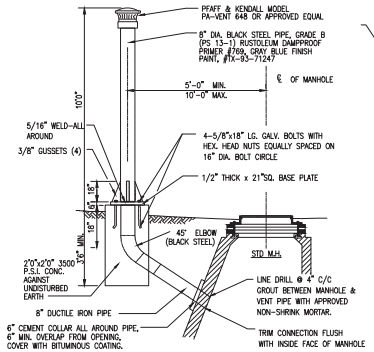

STANDARD VENT ASSEMBLY

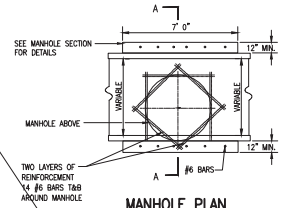

MANHOLE PLAN
48" & LARGER SEWERS

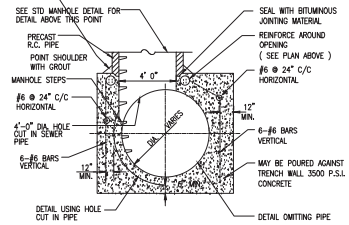

MANHOLE SECTION A-A
48" & LARGER SEWERS
SANITARY OR STORM

SANITARY SEWER NOTES

1. ALL MANHOLE RIMS SHALL BE SET TO GRADE AS FURNISHED BY THE ENGINEER.
2. RISERS ON SANITARY SEWERS SHALL BE INSTALLED WHERE SEWER IS OVER 8' DEEP TO A DEPTH OF 8'.
3. PLACE ONE 6" WYE FOR EACH LOT ON SANITARY SEWERS UNLESS OTHERWISE SPECIFIED.
4. ALL MANHOLES SHALL USE ECCENTRIC CONES PLACED TOWARD THE PROPERTY LINE UNLESS OTHERWISE NOTED.
5. INFILTRATION FOR ANY SECTION OF SEWERS BETWEEN MANHOLES SHALL NOT EXCEED 200 GALLONS PER INCH DIAMETER PER MILE OF SEWER PER 24 HRS.
6. NO FOOTING DRAINS SHALL BE CONNECTED TO THE BUILDING SEWER.
7. DIFFERENTIAL OF EXCAVATION AROUND EXISTING MANHOLES SHALL NOT EXCEED 6 FEET.
8. NO CONNECTION RECEIVING STORM WATER, SURFACE WATER, OF GROUND WATER SHALL BE MADE TO SANITARY SEWERS.
9. ALL SEWERS SHALL BE SUBJECT TO AIR INFILTRATION OR EXFILTRATION TESTS, OR A COMBINATION OF SAME, PRIOR TO ACCEPTANCE. ALL SEWERS OVER 24" DIAMETER SHALL BE SUBJECTED TO INFILTRATION TESTS. ALL SEWERS OF 24" DIAMETER OR SMALLER, WHERE THE GROUND WATER LEVEL ABOVE THE TOP OF THE SEWER IS OVER 7 FEET, SHALL BE SUBJECTED TO INFILTRATION TESTS. ALL SEWERS OF 24" DIAMETER OR LESS, WHERE THE GROUND WATER LEVEL ABOVE THE TOP OF THE SEWER IS 7 FEET OR LESS, SHALL BE SUBJECTED TO AIR TESTS OR EXFILTRATION TESTS.
10. ALL SEWER SYSTEM CONSTRUCTION SHALL CONFORM TO THE CURRENT STANDARDS AND GENERAL SPECIFICATIONS OF YPSILANTI TOWNSHIP, YCUA AND ANY OTHER AGENCY HAVING JURISDICTION OF THE CONSTRUCTION AREA.
11. ALL SEWERS SHALL BE TELEVISED, WITH TEST RESULTS APPROVED BY THE COUNTY AGENCY PRIOR TO PLACING THE SEWER IN SERVICE.
12. ALL STUBS SHALL HAVE A WATER AND AIR TIGHT BULKHEAD.
13. NO SEWER SHALL BE CONSTRUCTED LESS THAN 10" IN DIAMETER WITHOUT SPECIFIC WRITTEN APPROVAL OF THE TOWNSHIP.

MATERIALS

1. SANITARY FORCE MAIN
FORCE MAIN OUTSIDE THE WET WELL SHALL BE 2" POLYETHYLENE SDR 11.5 OR 2" PVC SDR 13.5 OR SCHEDULE 40. PIPE SHALL BE MANUFACTURED FROM VIRGIN MATERIALS AND BE SUITABLE FOR BURIED SANITARY SEWERAGE SERVICE. PIPE SHALL BE JOINED USING SOLVENT WELD COUPLINGS. INSTALLATION SHALL INCLUDE ALL FITTINGS AND APPURTENANCES TO CONNECT THE FORCE MAIN TO THE GRINDER PUMP SYSTEM AND TO ALLOW CONNECTION OF A CHECK VALVE AND GATE VALVE. UPON COMPLETION, THE FORCE MAIN SHALL BE TESTED AT A PRESSURE OF 50 PSI FOR 1 HOUR.
2. SANITARY SEWER
SANITARY SEWER SHALL BE COMPOSITE ABS OR PVC TRUSS PIPE CONFORMING TO REQUIREMENTS OF ASTM D-2680. OR, PVC PIPE CONFORMING TO ASTM D-3034 (SDR 26) MAY BE USED WHERE DEPTH IS LESS THAN 15'.

2019 ROAD REPAIRS
STANDARD DETAILS

SCALE
H: NTS V: NTS

SHEET
19
OF 20

CLIENT:
CITY OF YPSILANTI

JOB #
0094-18-0020

34000 Plymouth Road | Livonia, MI 48150 | P (734) 522-6711 | F (734) 522-6427 | WWW.OHM-ADVISORS.COM

COPYRIGHT 2017 OHM ALL DRAWINGS AND WRITTEN MATERIALS APPEARING HEREIN CONSTITUTE THE ORIGINAL AND UNPUBLISHED WORK OF OHM AND THE SAME MAY NOT BE DUPLICATED, DISTRIBUTED, OR DISCLOSED WITHOUT PRIOR WRITTEN CONSENT OF OHM

DRAWING PATH: P:\0000_0100\0094180020_2019_FAC\Drawings\Civil\Details\180020DET_STD.dwg Dec 07, 2018 – 8:59am

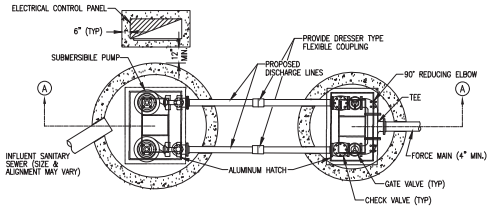

PLAN VIEW
PUMP STATION

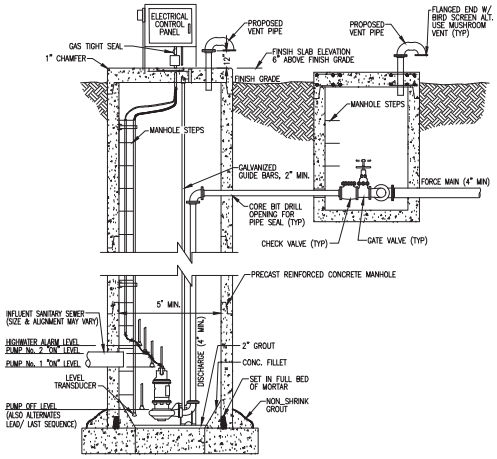

SECTION A–A
PUMP STATION

HOUSE CONNECTION CROSSING

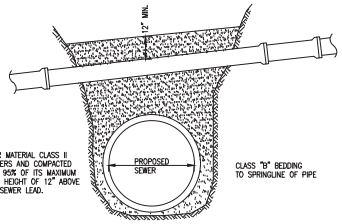

NOTES:
1. M.D.O.T. GRANULAR MATERIAL CLASS II PLACED IN 6" LAYERS AND COMPACTED TO A MINIMUM OF 95% OF ITS MAXIMUM UNIT WEIGHT TO A HEIGHT OF 12" ABOVE THE TOP OF THE SEWER LEAD.

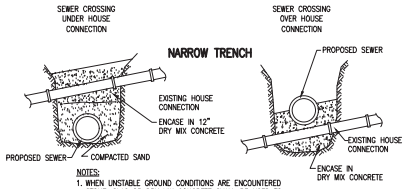

NOTES:
1. WHEN UNSTABLE GROUND CONDITIONS ARE ENCOUNTERED STONE, SLAG OR DRY MIX CONCRETE SHALL BE USED TO BACKFILL THE TRENCH TO A HEIGHT 12" ABOVE THE TOP OF THE SEWER LEAD.

CROSSING DETAILS

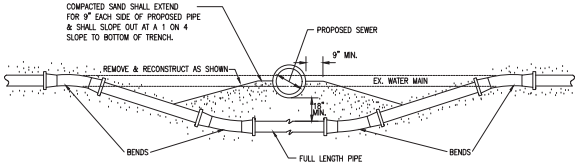

RELOCATION OF WATER MAIN
SANITARY OR STORM

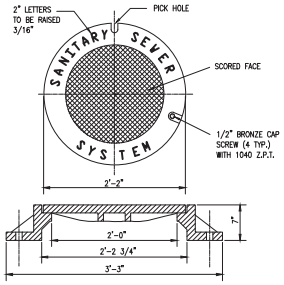

STANDARD FRAME & COVER
E.J.I.W. #1040 OR
1040 Z.P.T. AS REQ'D.

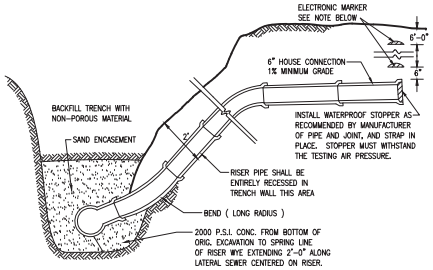

RISER DETAIL

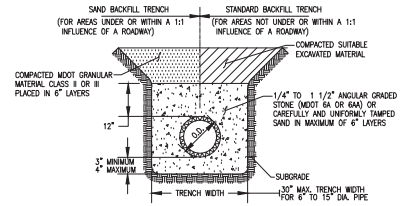

FLEXIBLE PIPE (10" OR 15" DIA ABS TRUSS OR PVC TRUSS)
STANDARD BEDDING AND TRENCH BACKFILL DETAIL

NOTES:
1. STONE MAY BE USED TO SPRINGLINE AND SAND ABOVE IF DESIRED

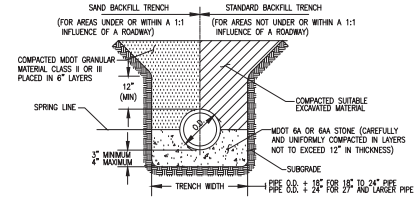

RIGID PIPE (18" DIAMETER AND LARGER CONCRETE)
STANDARD BEDDING AND TRENCH BACKFILL DETAIL

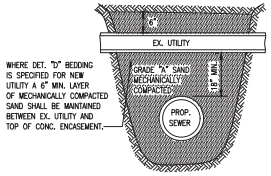

STANDARD PIPE SUPPORT
SANITARY OR STORM

NOTES:
1. COMPACTED SAND SHALL EXTEND FOR 9" EACH SIDE OF EX. PIPE AT 6" ABOVE EX. PIPE & SHALL SLOPE OUT AT A 1 ON 4 SLOPE TO BOTTOM OF TRENCH.

2019 ROAD REPAIRS
STANDARD DETAILS

SCALE
H: NTS V: NTS

SHEET
20
OF 20

CLIENT:
CITY OF YPSILANTI

JOB #
0094-18-0020

34000 Plymouth Road | Livonia, MI 48150 | P (734) 522-6711 | F (734) 522-6427 | WWW.OHM-ADVISORS.COM

COPYRIGHT 2017 OHM ALL DRAWINGS AND WRITTEN MATERIALS APPEARING HEREIN CONSTITUTE THE ORIGINAL AND UNPUBLISHED WORK OF OHM AND THE SAME MAY NOT BE DUPLICATED, DISTRIBUTED, OR DISCLOSED WITHOUT PRIOR WRITTEN CONSENT OF OHM

DRAWING PATH: P:\0000_0100\0094180020_2019_FAC\Drawings\Civil\Details\180020DET_STD.dwg Dec 07, 2018 – 8:59am

Bonnie Wessler

From: Jeff Murphy <JMurphy@theride.org>
Sent: Wednesday, December 19, 2018 2:26 PM
To: Bonnie Wessler
Subject: RE: 2019 roads projects

Hi Bonnie
The Ypsilanti Senior Citizens Center at 1015 N. Congress would be a great priority location. Bus stops are located on either side of Congress at Oakwood at the four way stop. A good design example of a bus stop at a stop sign is shown below. We coordinated this effort on Cross at Wallace with OHM last time around. We can also discuss any need for benches at these stops if the senior center is willing to Adopt-the stop(s).

Also the stop on Harriet at Hamilton is a good candidate, it has significant ridership with 10 daily riders.

Thanks Bonnie-Happy Holidays
Jeff

From: Bonnie Wessler <wesslerb@cityofypsilanti.com>
Sent: Wednesday, December 12, 2018 12:28 PM
To: Jeff Murphy <JMurphy@theride.org>

Subject: RE: 2019 roads projects

We love our transit in Ypsi, always happy to coordinate. :)
So we can prioritize a bit (I'm not 100% sure where we're at with budget)- which stops have the highest ridership &/or the most vulnerable user base?

--
Bonnie Wessler, AICP
City Planner
Community Development Division, City of Ypsilanti
734/483.9646 (office)
bwessler@cityofypsilanti.com

Sign up to receive City news and public notices here: http://cityofypsilanti.com/list.aspx
--

From: Jeff Murphy [mailto:JMurphy@theride.org]
Sent: Wednesday, December 12, 2018 9:19 AM
To: Bonnie Wessler <wesslerb@cityofypsilanti.com>
Subject: RE: 2019 roads projects

Please see attached Bonnie
Thanks
Jeff

From: Jeff Murphy
Sent: Wednesday, December 12, 2018 9:13 AM
To: 'Bonnie Wessler' <wesslerb@cityofypsilanti.com>
Subject: RE: 2019 roads projects

Hi Bonnie
Thanks for considering transit stops with this project. It looks like we have 7 bus stops in the project areas you mentioned. (most are on Congress) All of the stops are relatively low ridership therefore they don't currently meet the criteria to be on our project list. If Ypsilanti can include these stops in their project budget that would be great. In the past I believe you had us coordinate with OHM on bus stop design on Cross St. Depending on the existing topography some locations might be a challenge, the bus stop pads need to be at a 2% slope per the ADA.

Congress at Mansfield (2 stops, one on either side)
Congress at Wallace (2 stops, one on either side)
Congress at Oakwood (2 stops, one on either side)

South side of Harriet east of Hamilton # stop 2117

Thanks again Bonnie -Happy Holidays
Jeff

From: Bonnie Wessler <wesslerb@cityofypsilanti.com>
Sent: Tuesday, December 11, 2018 11:50 AM
To: Jeff Murphy JMurphy@theride.org.

Subject: 2019 roads projects

Hey Jeff-

We’re looking at our 2019 roads projects (huron between forest & cross, congress between Mansfield & elm, eastbound lanes of harriet between Washington & Hamilton), and it’s slated to go before planning commission this January. I’d love for you to take a look at the draft plans (attached) and let me know if you see an opportunity to improve stops/etc.
Thanks,
Bonnie

--
Bonnie Wessler, AICP
City Planner
Community Development Division, City of Ypsilanti
734/483.9646 (office)
bwessler@cityofypsilanti.com

Sign up to receive City news and public notices here: http://cityofypsilanti.com/list.aspx
--

City of Ypsilanti
Community & Economic Development Department

15 March 2018

Staff Review of Rezoning Application
Medical Marijuana Text Amendments
Provisioning Centers Buffer Increase

TABLED 03-2018

GENERAL INFORMATION

Applicant: City of Ypsilanti

Action Requested: Recommendation to City Council to approve a Text Amendment to Medical Marijuana Dispensaries (recommended to become "Medical Marijuana Provisioning Centers"), 122-532(b)(3)

SUMMARY

State regulations regarding medical marijuana facilities have recently changed to allow for more commercial operations. This amendment would limit the number of provisioning centers throughout the City by doubling the required buffer between provisioning centers from 500 feet to 1,000 feet.

BACKGROUND

In 2008, the voters of the State of Michigan approved a ballot initiative to legalize medical marijuana, using a caregiver, person-to-person model; Ypsilanti voters supported this ballot measure by over 80%. In 2011, the City of Ypsilanti adopted zoning regulations reflective of that, allowing groups of caregivers to grow under one roof in the M1, M2, WS, and CI zoning districts with a Special Use Permit; and caregivers to connect with patients at dispensaries in the B2, B3, and B4 zoning districts by right.

In 2014, the zoning ordinance shifted to a hybrid form-and-use-based schema. In these new zoning districts, dispensaries were only permitted by-right in C, and not permitted in GC. The State adopted the Medical Marijuana Facilities Licensing Act in late 2016, which permitted fully commercialized medical marijuana facilities under one corporate owner, including grow facilities, provisioning centers (dispensaries), processors, transporters, and testing facilities. In November 2017, Council passed an ordinance opting-in to the MMFLA, allowing up to three grow/processors and seven provisioning centers (dispensaries). Two updates to the zoning code have already been proposed and recommended to Council; one, to permit provisioning centers (dispensaries) as a Special Use in the GC zoning district, and another, generally updating the specific standards and definitions for medical marijuana facilities.

As a result of these changes at both the state and local level, it is possible that some existing provisioning centers could move; it is also possible that an existing provisioning center could go out of business and another provisioning center locate in the City. During the initial medical marijuana zoning

discussion in 2011, and during the more recent zoning discussions in 2017-18, both Planning Commission and City Council have expressed concern about marijuana business density, and the need to ensure a balanced mix of services and goods in our commercial areas. This amendment would reduce density significantly, generally allowing for only one provisioning center per commercial area, without creating significant nonconformities.

DISCUSSION

When the 2011 zoning amendments permitting dispensaries and grow facilities were adopted, there was no cap on the number of facilities, and the industry was untested and highly stigmatized. A cap on the number of facilities was introduced in 2013, as Council felt the local market was satisfied, and further increases in the number of facilities were unwise due to uncertainty in the State and Federal regulation. Many of these facilities have been operating since 2011; the newest opened in 2013. These facilities have, overall, been in compliance with local ordinances, including permitting on-demand inspections. The crime rate at these businesses is equivalent to other retail &/or industrial businesses.

This map, as of 5/2013, shows potential locations for additional dispensaries/grow facilities; the potential distribution of facilities differed from current primarily around Washtenaw and West Michigan. The zoning around Huron River Drive has changed from the Commercial-Industrial District and a variety of other zoning classifications to predominantly GC.

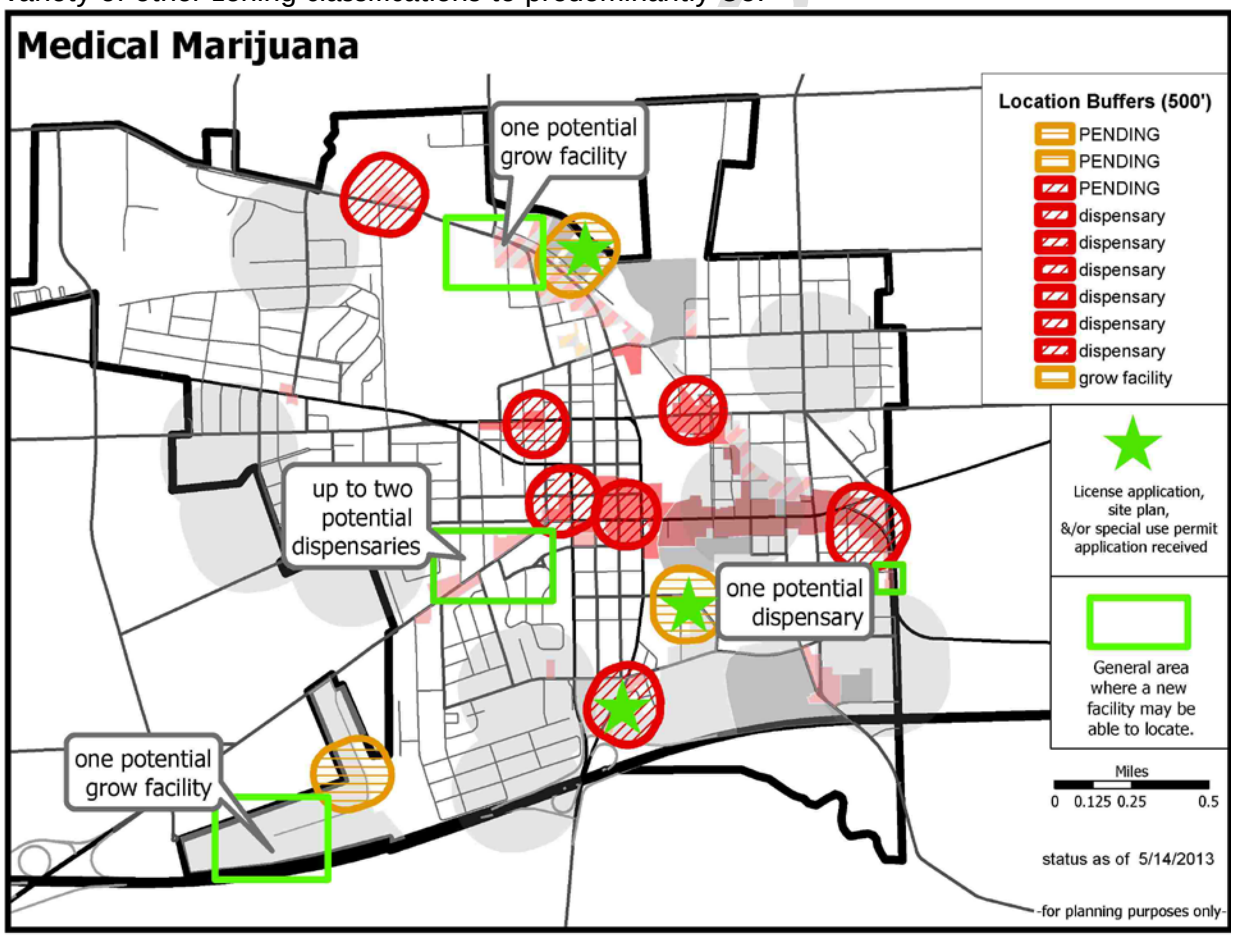

This map shows the *current* existing school buffers, facility buffers, and zoning districts. As a reminder, grow facilities are currently permitted only with a Special Use permit in GC and PMD; dispensaries are permitted by right in Center. The proposal on the table at Council would add dispensaries as a special use in the GC district. Recall also that Planning Commission has discretion in granting Special Use permits under §122-324.

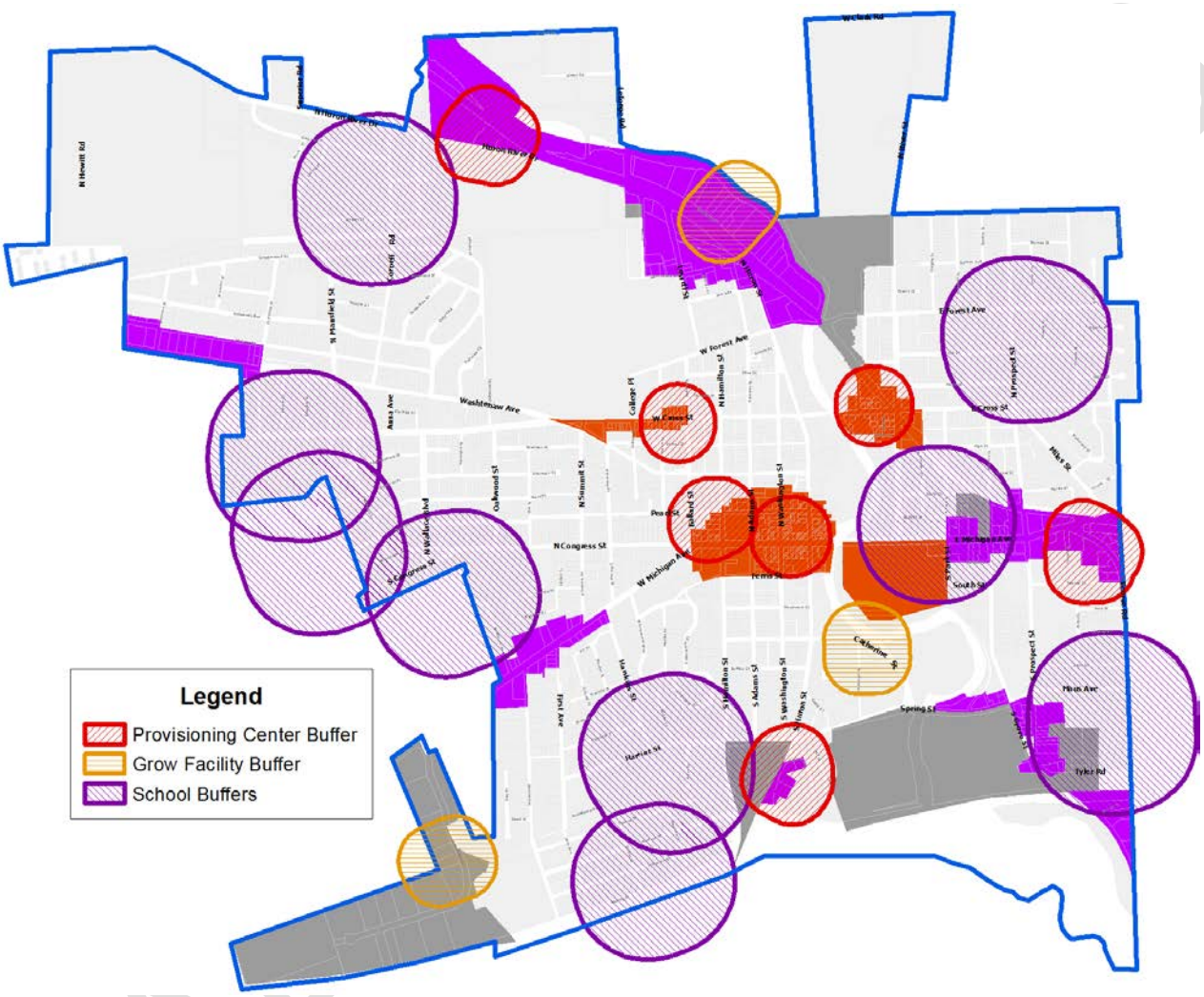

Under the proposed increase in buffers between provisioning centers, the East Michigan/Ecorse corridor cannot bear a new provisioning center, nor can Depot Town or West Cross. The two existing provisioning centers in downtown Ypsilanti would exclude each other by approximately four feet; however, Herbal Solutions is planning to move eastward once rehabilitation is complete at the new location. Commercial locations on Huron River Drive/Railroad St are already fairly constrained due to the location of the railway and river, as well as the large redevelopment site at 800 Lowell, so the expansion would have minimal effect.

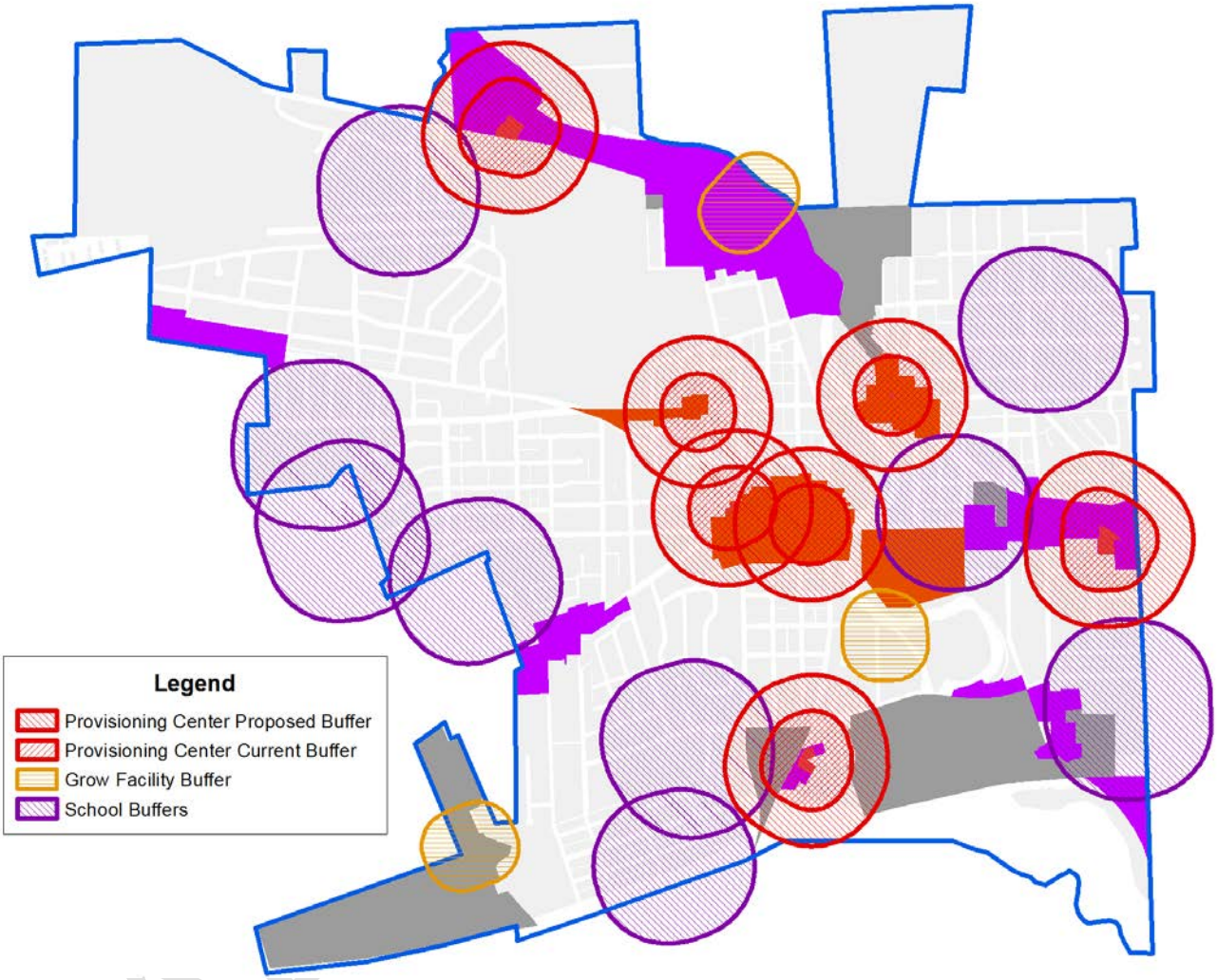

Looking more closely at specific areas, Washtenaw realistically could host two provisioning centers (one at each end), and West Michigan potentially two as well- fewer than the three and four, respectively, that would be able to locate there with the smaller buffer. West Michigan, it should be noted, has fewer commercial buildings that could presumably become available for such a venture; there do exist residential buildings that could be converted.

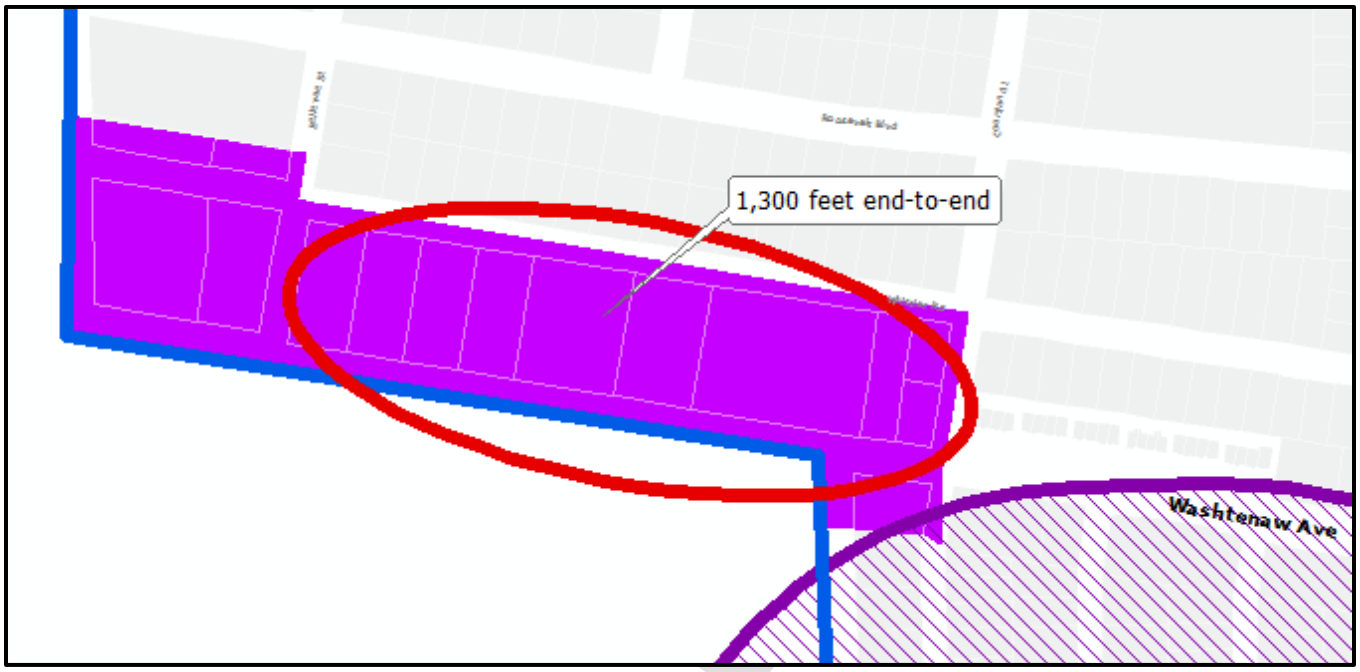

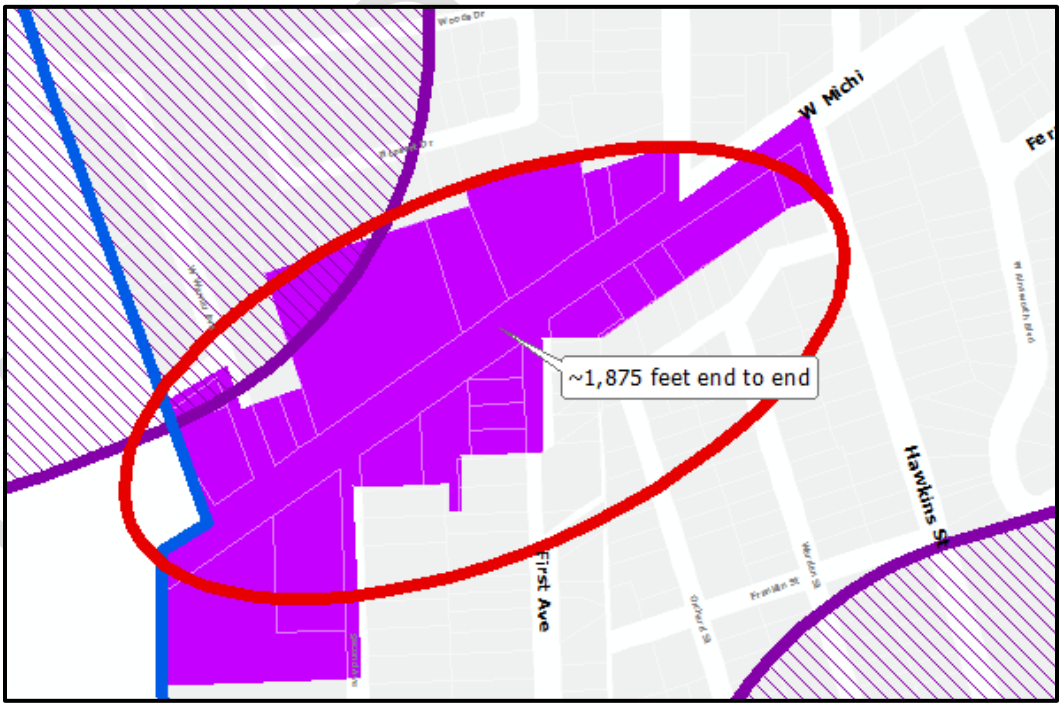

Medical Marijuana Dispensaries (recommended to become "Medical Marijuana Provisioning Centers"), 122-532(b)(3)	"Medical Marijuana Provisioning Centers," 122-532(b)(3) (changes proposed 2/21 presumed adopted)
The dispensary shall not be located within a five hundred (500) feet of a lawfully existing medical marijuana dispensary or growing/manufacturing facility as measured from the outermost boundaries of the lot or parcel on which the proposed dispensary and lawfully existing dispensary or growing/manufacturing facility is located;	The provisioning center shall not be located within a five hundred (500) feet of a lawfully existing medical marijuana growing &/or processing facility nor within one thousand (1,000) feet of a lawfully existing medical marijuana provisioning center as measured from the outermost boundaries of the lot or parcel on which the proposed medical marijuana facility and to the outermost boundaries of the lot or parcel on which the lawfully existing medical marijuana facility is located;

STANDARDS FOR AMENDMENTS §122-362(a)

(a) ***Text Amendment.*** *For a change to the text of the Zoning Ordinance, the Planning Commission shall consider and the City Council may consider, whether the proposed amendment meets the following standards:*

(1) The proposed amendment is consistent with the guiding values of the Master Plan; and
Applicable guiding values of the Master Plan include:

- Diversity is our strength: per the decision-making rubric. This maintains and potentially improves the diversity of the mix of businesses in Ypsilanti.
- Ypsilanti is sustainable: per the decision-making rubric, this action maintains, and has the potential to create, job opportunities for Ypsilantians, without over-investing into a volatile industry.

(2) The rezoning is consistent with description and purpose of the proposed district, and.
This would apply to all Provisioning Centers in all districts.

(3) The proposed amendment is consistent with the intent of this Zoning Ordinance; and
Per §122-100, the intent of the ordinance is to promote the public health, safety, and welfare. In particular, to:
• "create a safe, diverse, and sustainable city;
• meet the needs of the City's residents for food, fiber, energy, and other natural resources;
• guide the location of places of residence, recreation, industry, trade, service, and other uses of land;
• ensure that uses of the land shall be situated in appropriate locations and relationships;
• limit the inappropriate overcrowding of land and congestion of population and transportation systems and other public facilities;
• facilitate adequate and efficient provision for transportation systems, sewage disposal, water, energy, education, recreation, and other public service and facility needs;"
By increasing the distance between Provisioning Centers, it reserves space for other businesses to grow and thrive within the City, while still preserving access to medical marijuana.

(4) The proposed amendment will enhance the functionality, transportation network or character of the future development in the City; and

TABLED 03-2018

The change to the zoning ordinance has the long-term potential to do so. In the short-term, it will simply preserve the existing character of the City.

(5) The proposed amendment will preserve the historic nature of the surrounding area and of the City;
Staff does not anticipate that this amendment will negatively or positively affect the historic nature of the City.

(6) The proposed amendment will enhance the natural features and environmental sustainability of the City;
Staff does not anticipate that this amendment will negatively affect the natural features or environmental sustainability of the City.

(7) The proposed amendment will protect the health, safety, and general welfare of the public; or
The proposed change to the zoning ordinance will help maintain residents' access to medical marijuana, as prescribed by their doctor. The ordinance amendment will also help to reduce the potential that relatively volatile medical marijuana businesses might displace existing businesses in less-volatile industries.

(8) The proposed amendment is needed to correct an error or omission in the original text; or
This does not correct an error; it is an amendment due to a changing regulatory environment.

(9) The proposed amendment will address a community need in physical or economic conditions or development practices; and
Staff does not anticipate that this change will significantly impact a community need in physical or economic conditions. If the industry continues to grow, it is possible that medical marijuana businesses could reinvest significantly into their businesses. However, it is also possible that the businesses will face increasing regulatory hurdles at the federal level, and medical marijuana still carries some stigma. This amendment would decrease the potential impacts of both any stigma and the potential for an industry collapse due to regulatory issues.

(10)The proposed amendment will not result in the creation of significant nonconformities in the City.
The proposed amendment will make nonconforming the two dispensaries in downtown Ypsilanti. However, as noted, Herbal Solutions is in the process of preparing a space to the east that would conform under the new ordinance.

STAFF RECOMMENDATION

Staff recommends the Planning Commission recommend to City Council the ***approval*** of the proposed text amendment to 122-532(b)(3), "Medical Marijuana ~~Dispensaries~~ Provisioning Centers", with the following findings:
(1) The proposed amendment is consistent with the guiding values of the Master Plan;
(2) The proposed amendment is consistent with the intent of this Zoning Ordinance;
(3) The proposed amendment will protect the health, safety, and general welfare of the public;
(4) The proposed amendment will address a community need in physical or economic conditions or development practices.

_____
Bonnie Wessler
City Planner, Community & Economic Development Division

TABLED 03-2018

City of Ypsilanti
Community & Economic Development Department

January 2019

Text Amendments
Firearms

GENERAL INFORMATION

Applicant:	Staff
Action Requested:	Zoning Ordinance Text Amendment to address firearms sales and commercial recreational use.
Staff Recommendation:	Recommendation to City Council for approval.

BACKGROUND

The Planning Commission introduced a discussion regarding firearms and City regulations regarding their sale and commercial use within the City first at the March 2018 meeting, and heard presentations from staff and invited public comment at the June and July meetings. Currently, commercial sale of firearms is permitted wherever commercial sales are permitted, and commercial recreational/educational use is permitted wherever indoor/outdoor commercial use is permitted (indoor or outdoor recreation, generally). The Planning Commission has expressed interest in updating these regulations to be more reflective of how the City regulates other dangerous &/or controversial items.

City of Ypsilanti Zoning Authority

Zoning ordinances are enacted to protect the health, safety, and welfare of the public. There are limitations on what a zoning ordinance can and cannot do; some of these limitations are established by State law, others by Federal law, and others by case law.

Michigan is a “home rule” state, and local municipalities derive their power from the state. There are areas of law in which the state “pre-empts” the field; that is, they have chosen to regulate an area and municipalities have no power to further regulate it. The state has pre-empted the field of gun control, but case law has shown that municipalities may still regulate where firearms businesses may locate. (See attached attorney opinions regarding both sales and ranges.) “Gun control” is generally considered, for the purposes of this report, to consist of controls on owning and carrying a firearm.

Zoning addresses other items that are often controversial. Signs, which are strongly protected by the First Amendment, are regulated by the Zoning Ordinance for time, place, and manner and by the Building Code for structural safety. Adult regulated uses are uses such as strip clubs and stores which primarily sell sexually explicit material, also protected by the First Amendment. These uses are also regulated for time, place, and manner under the Zoning Ordinance, and the structures that house these uses must meet the same standards for structural safety under the Building Code as any other structure.

These statements are, of course, vast simplifications of quite a bit of law at the federal, state, and local level as well as a vast body of case law.

OTHER COMMUNITIES

Staff reviewed regulations in more than fourteen Michigan communities who had regulations online and searchable.

- One municipality regulated whether pistols could be taken in pawn shops
- Nine municipalities regulated where archery &/or gun ranges could be located (one allowed for archery ranges, but explicitly prohibited gun ranges; another allowed only for "police small arms firing ranges")
- One municipality prohibited "All uses involving the distribution of firearms or the storage of firearms intended for sale or distribution are prohibited as home occupations."
- One municipality regulated "firearms sales establishments" to a special use in one business district, and in the same manner as their equivalent of our "adult regulated uses."

ZONING: HOME OCCUPATIONS

Kalamazoo places the following restriction on home occupations:
"All uses involving the distribution of firearms or the storage of firearms intended for sale or distribution are prohibited as home occupations."

The equivalent place in the City's Zoning Code of Ordinances is 122-527(a), "Prohibited Home Occupations." This currently reads (formatted for clarity):
"The following are not permitted as home occupations:

- animal grooming establishments,
- barber shops or beauty parlors with more than one stylist or chair,
- medical clinics or hospitals with more than one practitioner and one non-practicing staff,
- commercial stables,
- day care centers,
- kennels,
- real estate offices,
- restaurants,
- vehicle repair or painting,
- retail or wholesale sales of any items stocked on the premises,
- landscape installation and maintenance businesses,
- construction contractors,
- snow removal,
- funeral homes,
- nursing homes,
- antique shops,
- bed and breakfast establishments,
- private clubs,
- trailer rentals,
- adult regulated uses,
- millinery and other apparel shops,
- veterinarian's office, clinic or hospital, or
- any use that endangers the health, safety, and welfare of any other persons residing in that area by reason of noise, noxious odors, unsanitary or unsightly conditions, fire hazards and the like.

DRAFT

- This section is not intended to prohibit offices related to the administration of construction contracting, landscaping, maintenance, or snow removal businesses."

Staff recommends that the item "any use involving the distribution of firearms or the storage of firearms intended for sale or distribution" or similar wording as determined after consultation with legal counsel, be added to this list.

ZONING: FIREARMS RANGES

There are several ordinances in the compared communities which work to appropriately locate firearms ranges (shooting ranges, rifle ranges, etc) within their communities. It appears that communities with a rural character permit for outdoor ranges; more urban or built communities do not. This is likely due to the lack of suitably large properties to accommodate outdoor shooting safely. As the City is likewise space-constrained, permitting for indoor ranges only is likely the course of action that best addresses the health, safety, and welfare of the community. It is also possible to have separate ranges and stores; I would recommend separating these uses in the definitions and in the table of permissible uses, but allowing stores to be accessory to ranges. Finally, it appears that indoor firearms ranges are often relegated to the industrial areas of the community; this is likely due to the built form of a modern standalone range resembling most closely that of a simply built large block building.

Although firearms will only be planned to be used inside a firearms range within the designated space, the high volume of firearms being moved from vehicles to indoors and back again introduces a potential point of failure, particularly with people who may be learning firearms handling. As the range of a stray bullet can be quite far, we do recommend setting a distance away from parks, schools, daycare centers, Eastern Michigan University, and the walkable Center districts, where larger numbers of people tend to congregate outdoors. Staff reviewed maximum projectile range for a number of weapon and ammunition types from Michigan's online Hunter Education course, available at https://www.hunter-ed.com/michigan/studyGuide/Maximum-Projectile-Range-Rifle/201023_700042734/. However, as the chances of an unobstructed path between a range and these locations is low, it is reasonable to set a shorter distance, such as 500', which would allow any stray projectile an opportunity to come to a halt before reaching the aforementioned areas.

We do also recommend that firearms ranges be located at some distance from establishments that sell alcohol, such as party stores (stores less than 15,000 square feet with sales of alcohol) and bars.

Staff recommends Indoor Firearms Ranges be permissible as a Special Use within the PMD district, when not within 500' of public parks, daycare centers, grade schools, Eastern Michigan University, and the Center District, as well as 500' away from a store less than 15,000 square feet with sales of alcohol or a bar/lounge. Staff further recommends one parking space be provided per shooting booth/lane or firing position, plus as required for any retail or office space on site, to help ensure compliance with regulations regarding transporting firearms safely.

ZONING: ARCHERY RANGES

Archery ranges can be treated in a way similar to firearms ranges, as modern bows are capable of shooting an arrow a very long distance with good power; however, the range is significantly less than firearms, and a stray shot from a bow will often have less power than a fair shot, unlike firearms. Planning Commission may consider adding them to the list of example uses under the definition of "indoor recreation," or including them with firearms ranges. Due to space constraints of the built environment, staff does not recommend permitting outdoor archery ranges.

DRAFT

ZONING: FIREARMS SALES

Staff was able to locate only one municipality that restricted locations of firearms sales as commercial businesses; Inkster. This appears to have been in response to an undesirable number of such businesses locating in prominent locations amongst the community, and has been incorporated into their "adult regulated uses" ordinance.

The City of Ypsilanti's Adult Regulated Uses are relegated to the PMD district, and further carry the following restrictions per 122-512:

Sec. 122-512. Adult regulated uses.

(a) In the development and execution of this section, it is recognized that there are certain uses, which by their very nature are recognized as having serious objectionable operational characteristics, particularly when several of them are concentrated in a small area, thereby having a deleterious effect on surrounding neighborhoods. Regulation of the location of these uses is necessary to ensure that the adverse effects of such businesses will not cause or contribute to the blighting or downgrading of the City's residential neighborhoods or commercial centers. It is the intent of this section to provide reasonable regulations for the establishment of adult regulated uses in a viable, accessible location where the adverse impact of their operations may be minimized. Uses subject to these regulations and the requirements of Article V of Chapter 10 are as follows:
  (1) Adult: Adult book or supply store, adult hotels or motels, adult motion picture theater/adult live stage performing theater, and adult mini-motion picture theater.
  (2) Cabarets.
  (3) Massage parlors and massage establishments.
  (4) Pawnshops.

(b) No adult regulated use may be permitted within 1,000 feet of any other adult regulated use. Measurement of the 1,000-foot radius must be made from the outermost boundaries of the lot or parcel on which the adult regulated use is proposed. The Planning Commission may waive this requirement for pawnshops if the following findings are made that:
  (1) The proposed use will not be contrary to the public interest or injurious to nearby properties, and that the spirit and intent of this article is observed.
  (2) The proposed regulated use will not enlarge or encourage the development of a "skid-row" or blighted area.
  (3) The establishment of an additional adult regulated use in the area will not be contrary to any program of neighborhood conservation nor will it interfere with any program of urban revitalization.
  (4) All applicable regulations of this chapter will be observed.

  The Planning Commission may not waive this locational requirement for adult uses, cabarets, massage parlors, or massage establishments.

(c) No adult regulated use may be permitted within 500 feet of any R1, HHS, P, MD, CN, CN-Mid and CN-SF district; nor may any adult regulated use be permitted within 500 feet of any school, park, library, playground, movie theater, licensed child care facility, or any other area or use where minor children are likely to congregate; nor may any adult regulated use be permitted within 500 feet of any religious institution. Measurement must be from the outermost boundaries of the lot or parcel on which the adult regulated use is proposed to be located. This prohibition may be waived if the Planning Commission is presented with a validated petition requesting such waiver, signed by two-thirds of all persons owning, residing in, or doing

DRAFT

business in the area within 500 feet of the proposed adult regulated use. The circulator of the petition must sign an affidavit attesting that the circulator personally witnessed the signatures and the signatures were affixed to the petition by the person whose name appears thereon. The signatures must be validated by the community economic development department. The Planning Commission cannot consider the waiver of the locational requirements until the required petition has been duly filed and verified. Pawnshops are not be subject to these locational requirements.

(d) The building and premises must be designed and constructed so that material depicting, describing, or relating to specified sexual activities or specified anatomical areas, cannot be observed by pedestrians or from vehicles on any public right-of-way. This provision must apply to any display, decoration, sign, show window, or other opening.

(e) No person may reside in or permit any person to reside in the premises of an adult regulated use.

(f) Such uses must comply with all applicable federal, state, and local licensing regulations. Initial and annual proof of such compliance must be a condition of special use approval and the continuance thereof.

(g) Upon finding that any condition, safeguard, or requirement has been breached, the Building Department can revoke any occupancy permit. All operations must cease 14 days following such notification of revocation by the Building Department, unless such violations are corrected. Also, if violations are not corrected within 14 days, reinstatement of a revoked permit must require a new special use application and approval thereof.

This ordinance dates to the mid-1990s, and has not been updated in a significant sense since then. Staff has mapped the permissible areas to operate an adult regulated business under the ordinance- which appears to limit them to about 12 properties. (see map: dark grey is the permissible district; if the red lines intersect it, it is disqualified from use). Due to this, staff does not recommend incorporating Firearms Sales Establishments into the adult regulated use ordinance we have in place.

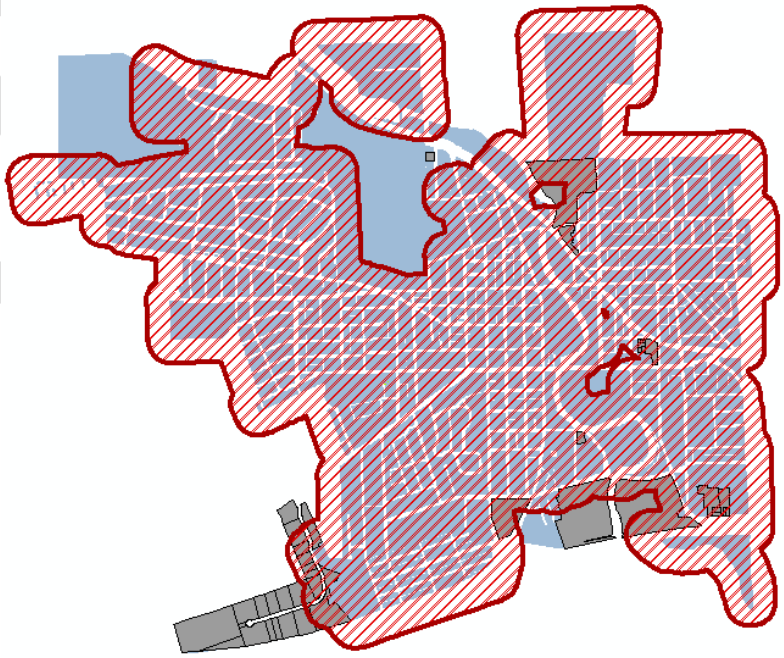

Staff recommends allowing Firearms Sales Establishments as a Special Use in GC and S/Res (special use when adjacent to residential, otherwise permitted) in PMD, with the following locational restrictions:

- **500' away from public parks, daycare centers, grade schools, Eastern Michigan University, and the Center District;**
- **500' away from pawn stores or secondhand goods dealers;**
- **500' away from a store less than 15,000 square feet with sales of alcohol, or a bar/lounge.**

Staff has not mapped these distances, and simply presents these for discussion.
MAP THESE DISTANCES

Inkster has also produced a definition of "firearms sales establishment." This definition excludes stores that sell firearms as only a portion of their overall business (ex. Meijer, Cabela's, some ranges, etc).

> Inkster's firearms definition: "FIREARMS SALES ESTABLISHMENT. A place of business of a firearms dealer. A firearms dealer is any person engaged in the wholesale or retail sale of firearms, the repair of firearms, or the creation or fitting of special barrels, stocks, or trigger mechanisms for firearms. A FIREARMS SALES ESTABLISHMENT shall be defined as only those establishments principally engaged in the display or sale of firearms or ammunition. A FIREARMS SALES ESTABLISHMENT is not a store of a generally recognized retail nature, which may include firearms or ammunition as an incidental and accessory use."

This definition could be interpreted to include firearms ranges and home occupations. Amending the final sentence to read "A FIREARMS SALES ESTABLISHMENT is not a store of a generally recognized retail nature, which may include firearms or ammunition as an incidental and accessory use<u>, nor a range where less than half of the public area is devoted to sales, nor a home occupation.</u>" (underlined words added.)

Staff believes that this amended definition would be sufficient for use in Ypsilanti, upon review and acceptance by legal counsel.

SUMMARY: FIREARMS AMENDMENTS

Staff recommends that Planning Commission recommend that City Council approve the following amendments to the zoning code:

- Amend **122-203** to add the definition of "firearms sales establishment" as "a place of business of a firearms dealer. A firearms dealer is any person engaged in the wholesale or retail sale of firearms, the repair of firearms, or the creation or fitting of special barrels, stocks, or trigger mechanisms for firearms. A firearms sales establishment shall be defined as only those establishments principally engaged in the display or sale of firearms or ammunition. A firearms sales establishment is not a store of a generally recognized retail nature, which may include firearms or ammunition as an incidental and accessory use, nor a range where less than half of the public area is devoted to sales. This does not include home occupations."

- Amend **122-203** to add the definition of "indoor firearms range" as "an indoor facility operated for the purpose of shooting with firearms, whether publically or privately owned and whether or not operated for profit."

- Amend **122-431** and **122-451** to permit firearms sales establishments to locate as a Special Use in GC and Special Use when adjacent to residential, otherwise permitted, in PMD, referencing a newly created section in Article V, Use Restrictions, Division 1: Specific Standards for Certain Uses, providing the following locational restrictions for firearms sales locations:
    - 500' away from public parks, daycare centers, grade schools, Eastern Michigan University, and the Center District; and
    - 500' away from pawn stores or secondhand goods dealers; and

  - 500' away from a store less than 15,000 square feet with sales of alcohol, or a bar/lounge.

- Amend **122-431** to permit firearms ranges to potentially locate as a Special Use within the PMD district, referencing a newly created section in Article V, Use Restrictions, Division 1: Specific Standards for Certain Uses, with the following locational restrictions:
  - 500' away from public parks, daycare centers, grade schools, Eastern Michigan University, and the Center District, and
  - 500' away from a store less than 15,000 square feet with sales of alcohol, or a bar/lounge.

- Amend **122-527(a)**, Home Occupations, to prohibit as a home occupation any use involving the distribution of firearms or the storage of firearms intended for sale or distribution.

- To further amend **Article V, Use Restrictions, Division 1: Specific Standards for Certain Uses**, to ensure that the newly created sections are located in alphabetical order; sections in said Division are re-numbered, and that references to those sections are updated throughout the Chapter.

Further, staff recommends that Planning Commission recommend that City Council direct legal counsel to review Chapter 82 and provide recommendations regarding limiting the acceptance of firearms by secondhand goods establishments within the City.

STAFF RECOMMENDATION

Staff recommends the Planning Commission recommend City Council ***approval*** of the text amendment "Firearms Amendments" with the following findings:

1. The amendments are consistent with the guiding values of the Master Plan.
2. The amendments are consistent with the intent of the zoning ordinance.
3. The proposed amendment will enhance the functionality and character of the future development in the City.
4. The proposed amendment will protect the health, safety, and general welfare of the public.
5. The proposed amendment will not result in the creation of nonconformities.

Further, staff recommends that Planning Commission recommend that City Council direct staff to review Chapter 82 and provide recommendations regarding limiting the acceptance of firearms by secondhand goods establishments within the City.

_____

Bonnie Wessler
City Planner, Community & Economic Development Division

c.c. File

DRAFT

Barr, Anhut & Associates, P.C.
ATTORNEYS AT LAW

105 Pearl Street
Ypsilanti, MI 48197
(734) 481-1234
Fax (734) 483-3871
www.barrlawfirm.com
e-mail: jbarr@barrlawfirm.com

John M. Barr
Karl A. Barr
Daniel J. DuChene

Jesse O'Jack ~ Of Counsel
William F. Anhut ~ Of Counsel – Retired
Jennifer A. Healy~ Legal Assistant

MEMORANDUM

To: **Bonnie Wessler, Ypsilanti City Planner**
From: **John M. Barr, Ypsilanti City Attorney**
Date: **March 8, 2018**
Re: **Regulation of firearms in city**

You have advised me that there are several inquiries of opening a store for the sale of firearms in the city. You requested an opinion of the extent that the city may regulate this activity. The answer is that the city may not regulate gun sales, but may zone where guns may be sold in the city.

Michigan municipalities are political subdivisions of the state and derive all their power from the state. *Tally v City of Detroit*, 54 Mich. App. 328 (1974).

Municipalities have no power to regulate when the state "preempts" the field. *People v Llewellyn*, 401 Mich 314 (1977).

The state of Michigan has by legislation preempted the field of gun control and prohibited all local units of government from gun control, MCL 123.1102:

> A local unit of government shall not impose special taxation on, enact or enforce any ordinance or regulation pertaining to, or regulate in any other manner the ownership, registration, purchase, sale, transportation, or possession of pistols, other firearms... except as provided by federal law or a law of this state.

There are some limited exceptions in MCL 123.1103 that allow municipalities to place limited restrictions on municipal employees regarding the possession of firearms in the course of their employment.

Barr, Anhut & Associates, P.C.
ATTORNEYS AT LAW

105 Pearl Street
Ypsilanti, MI 48197
(734) 481-1234
Fax (734) 483-3871
www.barrlawfirm.com
e-mail: jbarr@barrlawfirm.com

John M. Barr
Karl A. Barr
Daniel J. DuChene

Jesse O'Jack ~ Of Counsel
William F. Anhut ~ Of Counsel – Retired
Jennifer A. Healy~ Legal Assistant

The case of *Michigan Coalition for Responsible Gun Owners v City of Ferndale*, 256 Mich App 401 (2003) relied on this statute in holding that the state had preempted the field of regulation of firearms and upheld a lower court ruling that the City of Ferndale could not make city buildings gun-free zones.

In *Morgan v United States DOJ*, 473 F. Supp.2d 756 (ED Mich 2007), the court upheld a Redford Township zoning ordinance regulating the areas where the sale of guns could occur.

I have attached copies of MCL 123.1102 and 1103 for your convenience.

FIREARMS AND AMMUNITION (EXCERPT)
Act 319 of 1990

123.1102 Regulation of pistols, other firearms, pneumatic guns, or ammunition.

Sec. 2.

A local unit of government shall not impose special taxation on, enact or enforce any ordinance or regulation pertaining to, or regulate in any other manner the ownership, registration, purchase, sale, transfer, transportation, or possession of pistols, other firearms, or pneumatic guns, ammunition for pistols or other firearms, or components of pistols or other firearms, except as otherwise provided by federal law or a law of this state.

History: 1990, Act 319, Eff. Mar. 28, 1991 ;-- Am. 2015, Act 29, Eff. Aug. 10, 2015

© 2017 Legislative Council, State of Michigan

Rendered 3/8/2018 09:19:17
© 2018 Legislative Council, State of Michigan

Michigan Compiled Laws Complete Through PA 40 of 2018
Courtesy of www.legislature.mi.gov

FIREARMS AND AMMUNITION (EXCERPT)
Act 319 of 1990

123.1103 Local unit of government; permissible prohibitions or regulation.

Sec. 3.

This act does not prohibit a local unit of government from doing any of the following:

(a) Prohibiting or regulating conduct with a pistol, other firearm, or pneumatic gun that is a criminal offense under state law.

(b) Prohibiting or regulating the transportation, carrying, or possession of pistols, other firearms, or pneumatic guns by employees of that local unit of government in the course of their employment with that local unit of government.

(c) Regulating the possession of pneumatic guns within the local unit of government by requiring that an individual below the age of 16 who is in possession of a pneumatic gun be under the supervision of a parent, a guardian, or an individual 18 years of age or older, except that an ordinance shall not regulate possession of a pneumatic gun on or within private property if the individual below the age of 16 is authorized by a parent or guardian and the property owner or legal possessor to possess the pneumatic gun.

(d) Prohibiting an individual from pointing, waving about, or displaying a pneumatic gun in a threatening manner with the intent to induce fear in another individual.

History: 1990, Act 319, Eff. Mar. 28, 1991 ;-- Am. 2015, Act 29, Eff. Aug. 10, 2015

© 2017 Legislative Council, State of Michigan

Barr,
Anhut &
Associates, P.C.
ATTORNEYS AT LAW

105 Pearl Street
Ypsilanti, MI 48197
(734) 481-1234
Fax (734) 483-3871
www.barrlawfirm.com
e-mail: jbarr@barrlawfirm.com

John M. Barr
Karl A. Barr

Jesse O'Jack ~ Of Counsel
William F. Anhut ~ Of Counsel – Retired
Jennifer A. Healy~ Legal Assistant

MEMORANDUM

To: **Bonnie Wessler, Ypsilanti City Planner**
From: **John M. Barr, Ypsilanti City Attorney**
Date: **January 10, 2019**
Re: **Firearm/shooting ranges**

You have inquired whether a city may regulate firearm/shooting ranges. The answer is yes. MCL 691.1543 provides: "Except as otherwise provided in this act, this act does not prohibit a local unit of government from regulating the location, use, operation, safety and construction of a sport shooting range."

City of Ypsilanti

Community & Economic Development Department

January 2019

Text Amendments
2017-2018 Issues Update

GENERAL INFORMATION

Applicant: Staff

Action Requested: Zoning Ordinance Text Amendment to address issues that have been noted since the 2017 update.

Staff Recommendation: Recommendation to City Council for approval.

BACKGROUND

Since adopting the new ordinance schema in 2014 (enacted 2015), we have undergone one major "bug fix" update in 2016 (enacted 2017) wherein we addressed several minor issues, such as structure, numbering, and organization; as well as some issues where the ordinance was not aligned with policy and goals as laid out in the Master Plan. Staff has been tracking the performance of the code since that time and has noted several areas of potential improvement in the same vein. Those areas are as follows:

- add the processes for Nonconforming A and ZBA actions to the process table
- clarify that sketch plan approvals, etc, are subject to the same provisions
- Fix the numbering in several sections
- Parking quantity updates
- Update language "Provisioning Centers" in GC to "Medical Marijuana Provisioning Centers"; correct language regarding child care
- Explicitly state that publicly-erected signage does not require conformance to the ordinance
- Update performance guarantee standard to match adopted engineering standards
- Make properties in CN-SF eligible for Nonconforming A
- Lower accessory building setbacks in form-based districts to match accessory building setbacks in use-based districts
- ZBA member attendance requirements

PROPOSED CHANGED TEXT: SKETCH PLAN PROVISIONS

Removals are noted in strikethrough (~~strikethrough~~); additions are noted by underline (underline).

Sec. 122-308. Sketch Plans.

A sketch plan may be submitted for administrative reviews or as noted elsewhere in this Ordinance. A sketch plan is a scaled drawing based on a legal survey containing less information than a site plan, drawn in compliance with this Ordinance but not required to be prepared by a licensed professional. Sketch plans shall contain the following information:

(a) Address of project, scale, north arrow, date of original drawing, and date of any revisions.

(b) Name, address and phone number of the site owner, developer, and/or plan designer.

(c) The area of the site in square feet or acres, excluding all existing and proposed rights-of-way.

(d) Location and setbacks of existing and proposed buildings; their intended use; the length, width and height of each building; and the square footage of each building. The location and dimensions of any open air uses shall also be provided, such as recreational fields, outdoor cafes, or open air sales areas.

(e) Parking areas and access drives, showing the number and size of spaces, aisles, loading areas, and barrier-free access ramps, and type of surfacing.

(f) Landscape plan showing type, size, and location of all plant material. Existing vegetation which is to be retained on the site shall be illustrated.

(g) Location of all proposed and existing accessory structures, including fences or walls, outdoor lighting fixtures, outdoor communication devices, flagpoles, storage sheds, transformers, dumpsters or trash removal areas, and signs. Also show the location of all sidewalks or pathways, fire hydrants, and utility poles.

(h) Location of all outdoor storage areas for materials and the manner in which materials shall be screened and/or covered.

(i) Notation of any variances or special use permits which are required, any legal nonconforming uses or structures, and any state or federal permits which have been secured or may be necessary to secure.

(j) All of the provisions of this Chapter regarding violations, amendments, expirations, and approvals that apply to site plans shall have the same effect upon sketch plans.

PROPOSED CHANGED TEXT: PARKING QUANTITIES

Removals are noted in strikethrough (~~strikethrough~~); additions are noted by underline (underline).

Sec. 122-691. Minimum and maximum number of parking spaces.

The minimum number of off-street parking spaces by type of use in all zoning district shall be determined in accordance with the following schedule. The maximum number of off-street parking spaces must not exceed 120% of the required parking spaces, except for those uses in the "Residential" category, which are not subject to a maximum. The Planning Commission may grant waivers as noted in §122-692.

USE	AUTOMOBILE SPACES PER UNIT OF MEASURE
RESIDENTIAL	
Single-family detached dwellings, townhouses, and two-family dwellings	~~1 space per unit~~ No minimum.
Multiple-family dwellings~~, including townhouses~~	1.5 for each dwelling unit, plus 1 for each 10 dwelling units for guest parking.
Upper-story residential units in C, HC, NC, GC, and HHS districts	1 for each dwelling unit.
~~Group living with support staff, not licensed by State of Michigan~~	~~1 for each 3 beds, plus 1 per employee on an average employment shift.~~
Group residence, roominghouse, and supportive housing	1 for each ~~bedroom or sleeping room~~ 4 residents, plus 1 for each employee on ~~or~~ the largest typical employment shift.
~~Adult Foster Care~~	~~1 for each 3 beds, plus 1 for each employee an average employment shift.~~
Accessory Dwelling Unit	~~1 for each dwelling unit~~ No minimum.
~~Family Child Care Home~~	~~Minimum of 1 and a maximum of 3 child-care drop off spaces.~~
RECREATION, EDUCATION & PUBLIC ASSEMBLY USES	
Religious institutions; private assembly (such as catering or clubs); performance venues & theaters; libraries, museums, and cultural or community centers; or similar facilities	1 for each 500 square feet of usable floor area, excluding area devoted to storage.
Indoor recreation, including swimming pools	1 for each ~~3~~ 4 persons who may be legally admitted at one time based on the occupancy load established by local, county, or state fire, building, or health codes, plus 1 for each employee on an average employment shift.
Primary and secondary schools, public and private	1 for each teacher, employee or administrator, plus 1 for each 10 students
Post-secondary educational institutions (public & private)	1 for each teacher, employee or administrator and 1 for each 5 students.
Municipal, county, regional & state service uses	1 for each 1,000 square feet of usable floor area.
Child care centers	1 off-street parking space per caregiver required to staff facility at the state-licensed capacity, plus 1 space for every 20 children the facility is licensed to care for.
Outdoor recreation and fields	1 for each 1,000 square feet of recreation space.
Stadiums, sports arenas, or similar places of outdoor assembly	1 for each 4 seats or 8 feet of linear bench space.
INFRASTRUCTURE	
Radio & Television Studios or Stations	1 per each 500 square feet of gross floor area.
Utility buildings	1 for each employee on an average employment shift.

USE	AUTOMOBILE SPACES PER UNIT OF MEASURE
Energy, electricity, heat generation, or sewage plants	1 for each employee on an average employment shift.
SERVICES	
Bed & Breakfasts or Inns	1 per occupancy unit plus 1 per employee on an average employment shift.
Motels, hotels or other commercial lodging establishments	1 per occupancy unit plus 1 per employee on an average employment shift; plus extra spaces for dining rooms, ballrooms, or meeting rooms as required.
Business and professional offices and services	1 per 300 square feet of usable floor area.
Funeral homes	1 per 50 square feet of assembly room, parlor and slumber room.
Laundromats	1 per 3 washing machines.
Financial service, including banks	1 per 300 square feet of usable floor area, plus stacking spaces for each drive-through transaction station as required under §122-694.
Nursing Homes	1 per 3 beds.
Hospitals	1 for each 4 patient beds, plus 1 for every 200 square feet of out-patient service area
Medical or dental offices or clinics, substance abuse treatment facilities	1 for each 300 square feet of usable floor area in waiting rooms, plus 1 for each examining room, dental chair, or similar use area.
Personal service establishments	2 spaces for each of the first 2 beauty or barber chairs, and 1½ spaces for each additional chair, or 1 for each 300 square feet of useable floor ~~area whichever is greater~~.
Self-storage facilities	1 per 200 storage units, plus 1 per 300 square feet of usable floor area of office space, plus 1 for residence, if provided.
Catering service	1 per 600 square feet of usable floor area.
All other service uses not elsewhere specified	1 for each 300 square feet of gross floor area.
COMMERCIAL	
Furniture and appliances, household equipment; repair shops; showrooms of a plumber, decorator, electrician or similar trade; and other similar uses	1 for each 600 square feet of usable floor area.
Open air businesses	1 for each 600 square feet of lot area used for open air business, plus ~~extra~~ spaces for indoor sales or office space as required.
Shopping centers or clustered commercial centers over 100,000 square feet in gross floor area	1 for each 300 square feet of gross floor area.
Arts & crafts studios	1 per 1,000 square feet plus 1 per classroom.
All other retail uses not elsewhere specified	1 for each 250 square feet of gross floor area.
RESTAURANTS	
Café, coffee shop, restaurants, tasting rooms or bar/lounge, and other establishments where food, beverages, or refreshments are sold primarily for consumption on the premises	1 for each 100 square feet of usable floor area, or 1 for each 3 persons allowed within the maximum occupancy load as established by local, county, or state fire, building or health codes; whichever is greater.
Restaurant, fast food, drive-in or drive-through	1 for each 50 square feet of customer waiting and eating areas, plus 1 for each employee in the largest employment shift, plus 8 stacking spaces for each drive-in or drive-through transaction station.
AUTO-ORIENTED	

USE	AUTOMOBILE SPACES PER UNIT OF MEASURE
Automobile filling stations	~~1 for each employee, plus~~ spaces required for other uses within the station, such as the retail floor area, carryout restaurants, subtracted by one half space for each automobile fueling position.
Automobile repair	~~1~~ 0.5 for each employee in the largest employment shift, plus 1 space for each auto service stall. In addition, stacking spaces for automobiles awaiting entrance to a service stall shall be provided as required under §122-694.
Automobile wash (automatic and self-serve) and detailing	~~1~~ 0.5 for each employee in the largest employment shift. In addition, stacking spaces for automobiles awaiting entrance to the wash facility must be provided as required under §122-694.
Motor vehicle sales and service establishments, trailer sales and rental, and boat showrooms	1 for each 500 square feet of usable floor space of sales room, plus 1 for every 500 square feet of outdoor sales area, plus 1 for each 1 auto service stall in service areas, plus 1 space per employee on the largest employment shift.
Automobile rental (parking, storage, wash & repair)	
Vehicle, Recreational Vehicle, Storage and Towing	1 for 300 square feet of office space, plus 1 space per employee on the largest employment shift.
RESEARCH	
Laboratories or research establishments	5, plus 1 for every 1.5 employees in the largest working shift; or 1 space per each 1,000 square feet of gross floor area for storage areas, and 1 space per 300 square feet of office area~~; whichever is greater~~.
PRODUCTION, MANUFACTURING & DISTRIBUTION	
Craft production	1 per 1,000 square feet
Wholesale or distribution facility	5 plus 1 for every employee in the largest working shift; or 1 for every 1,700 square feet of gross floor area, plus 1 for each 300 square feet of office area. Spaces shall also be provided for any retail or service area in addition to the above.
Assembly, processing or manufacturing	5 plus 1 for every 1½ employees in the largest working shift; or 1 space per each 1,000 square feet of gross floor area for assembly, processing and manufacturing and storage areas, and 1 space per 300 square feet of office area.
URBAN AGRICULTURE	
Community garden	None
Hydroponics, aquaculture and aquaponics and similar raising of food	5 plus 1 for every employee in the largest working shift; or 1 for every 1,700 square feet of gross floor area, plus 1 for each 300 square feet of office area. Spaces shall also be provided for any retail or service area shall be in addition to the above.

Sec. 122-692. Parking Requirement Reductions.

Off-street parking requirements may be reduced subject to the following regulations.

(a) **Transit**. Parking requirements may be reduced by up to 20 percent for buildings, structures, or uses within ~~three hundred (300)~~ seven hundred and fifty (750) feet of a commuter rail station or bus transit center or within ~~one hundred (100)~~ five hundred (500) feet of a transit stop, provided said stop or center is approachable via sidewalk. In situations where this would result in a discount of more than 10 spaces, a traffic study may be required to demonstrate that a sufficient number of vehicle drivers would immediately opt for transit, and therefore would not result in adverse parking impacts on surrounding properties. The Ride shall verify that the transit station or transit stop ~~is in a~~ is not scheduled to move in the 5-year plan for the Ride.

(b) **Car-sharing and carpooling spaces**. Parking spaces reserved, signed, and enforced for hourly car rental/car-sharing services may count as four (4) regular parking spaces. Parking spaces reserved, signed, and enforced for carpooling or vanpooling services may count as two (2) regular parking spaces.

(c) **Electric car parking/charging spaces.** Electric car spaces shall include a power outlet for use by the parked car. Such spaces should be closest to the main entrance (exclusive of barrier-free spaces). Parking spaces reserved, signed, and enforced for electric car charging stations may count as two (2) regular parking spaces.
(d) **Bicycle spaces**. Parking requirements may be reduced by one (1) space for every four (4) covered, secure bicycle parking spaces provided on site. Parking requirements may be further reduced by four (4) spaces where free showers are available for employee use within the building.
(e) **Seasonal bicycle parking.** Up to 5% of vehicle parking spaces may be occupied by bike racks April through October in the Walkable Urban Districts.
(f) **Walkable Urban Districts.** The parking requirements in each of the Walkable Urban Zoning Districts, with the exception of General Corridor, shall be halved. Planning Commission has the authority to waive 50% of the parking requirements for uses located in General Corridor with a finding that the area immediately surrounding the use is highly walkable.
(~~f~~g) **Planning Commission Authority**. The Planning Commission shall have the authority to waive the number of required off-street parking spaces, in addition to the reductions above, by up to 20%, with a finding that there is a special circumstance that particularly relates to the size of an existing parcel and building in combination, and/or character of the proposed use.

This dates back to discussions held in 2017, when it was noted that a property one block away from the transit center was only barely eligible for the transit discount. Other discounts and reductions reflect a continuation of the traditional built form and the desire to encourage a walkable, bikeable, bus-able community, in furtherance of public health.

PROPOSED CHANGED TEXT: LANGUAGE/USE TABLE TWEAKS

Removals are noted in strikethrough (~~strikethrough~~); additions are noted by underline (underline).

122-451: "Provisioning Centers" be amended to read "Medical Marijuana Provisioning Centers"

122-441: "Roominghouse" be removed, and "Group Residence" be amended to read "Group Residences and Roominghouses."

This is intended to "clean up" the text and ensure that the use tables accurately reflect the definitions and use-specific conditions elsewhere in the Code.

PROPOSED CHANGED TEXT: NUMBERING

Removals are noted in strikethrough (~~strikethrough~~); additions are noted by underline (underline).

Proposed that the subsections of section 122-683 be renumbered correctly and to remove duplicates.

PROPOSED CHANGED TEXT: PUBLIC SIGNAGE

Removals are noted in strikethrough (~~strikethrough~~); additions are noted by underline (underline).

Sec. 122-661. Generally.

(c) **Signs exempted.**
  (1) Any sign required by City ordinance or State law, as applicable. This includes, but is not limited to, address signs, Fire Department Connection signs, or signs indicating barrier-free parking locations.

(2) Any sign less than three square feet in area and five feet in height on the interior of a site placed so as to be oriented and clearly legible to persons on the site, provided that each sign be no closer than twenty feet to another such sign.
(3) Drive-Through Signs. Any use that includes a drive-through is permitted to have signs up to a maximum height of six feet and a maximum area of 32 sq. ft. per drive-through use, located in the rear of the site, when placed so as to be oriented and clearly legible to persons on the site.
(4) Signs erected by a public body. Any sign or marker erected by the City, County, State, or other municipal body is not subject to these requirements.

This reflects actual practice and the legal setting; the City, State (MDOT, MSHDA), and other governmental bodies are not required to obtain sign permits. This modification is requested to set expectations, rather than change the legal landscape.

PROPOSED CHANGED TEXT: PERFORMANCE GUARANTEES

Removals are noted in strikethrough (~~strikethrough~~); additions are noted by underline (underline).

Sec. 122-317. Performance guarantee.

(a) **Purpose**. To ensure faithful compliance with the provisions of this chapter and any conditions imposed thereunder, a performance guarantee may be required by City staff, the Planning Commission, or when appropriate the City Council to be deposited with the City. Improvements for which a performance guarantee may be required include, but are not limited to, landscaping, berms, screening, lighting, surfacing of drives, parking, traffic control devices, water or sewer line expansions, sidewalks, drainage, and other improvements.
(b) **General requirements**. A performance guarantee may be in the form of a bond, irrevocable bank letter of credit, cash deposit, or other form of security. Such guarantee shall be provided to the City Clerk, and shall be provided any time after a site plan has been approved.
(c) **Amount**. The amount of the performance guarantee shall be up to 100% of the cost of the improvements associated with the performance guarantee. Accordingly, the applicant shall provide an itemized cost estimate of the improvements, and such estimate shall be verified by the Building Department. The form of the guarantee shall be approved by the City attorney.
(d) **Failure to complete improvements**. If the applicant should fail to provide any of the site improvements according to the approved site plans within the time period specified in the guarantee, the performance guarantee shall be forfeited. The City shall rebate a proportional share of cash deposits only when requested by the depositor, based on the percent of improvements completed, as attested to by the depositor and verified by the Building Department. In cases where the provisions of this article have not been met, the amount of the aforementioned performance guarantee shall be used by the City to complete the required improvements and the balance, if any, shall be returned to the applicant.

This proposal reflects established and adopted engineering standards, which require a performance guarantee of 50% in some specific cases. Please see the adopted engineering standards at cityofypsilanti.com/permits.

PROPOSED CHANGED TEXT: CN-SF FOR NONCONFORMING A

Removals are noted in strikethrough (~~strikethrough~~); additions are noted by underline (underline).

Sec. 122-351. Class A Conditions.

The decision to grant a class A designation shall be made by the Planning Commission in writing, setting forth its findings of fact and basis for the designation. Only multiple family dwellings and/or group residence uses in R1, CN-SF, and CN-Mid shall be eligible for this designation. For changes or improvements to a class A use, site plans shall be required.

This modification reflects the initial Planning Commission recommendation to City Council in 2015, and allows existing housing stock to be rebuilt in the case of a casualty. It does not confer any rights to expand existing uses nor to establish new multifamily uses.

PROPOSED CHANGED TEXT: FORM-BASED DISTRICT ACCESSORY BUILDING SETBACKS

Proposed that the side and rear yard setbacks for detached accessory structures for the building types of ES, HS, CO, TH, and AH be amended such that the rear and side setbacks be three feet, and that they be reduced to one foot if abutting an alleyway.

This reverts the setbacks of accessory buildings to residential uses to pre-2014 levels, and more accurately reflects the dense, historic nature of these areas.

PROPOSED CHANGED TEXT: ZBA MEMBER ATTENDANCE REQUIREMENTS

Removals are noted in strikethrough (~~strikethrough~~); additions are noted by underline (<u>underline</u>).

Sec. 122-395. Establishment and membership.

(h) **Resignations**. When Zoning Board of Appeals members propose to resign, if reasonably feasible, they shall give notice of their intent in writing to the chairperson, and make the date of resignation effective in such a manner as to allow time for appointment of replacements~~. Failure to attend three consecutive regular meetings, or three of seven consecutive meetings, without recorded consent of the chairperson shall be construed as resignation from the Zoning Board of Appeals by absence.~~ When a member dies or resigns ~~(including resignation by absence)~~, the chairperson shall promptly notify the mayor that a vacancy exists.

The Charter provides for removal of members from appointed bodies.

PROPOSED CHANGED TEXT: ERROR CORRECTIONS

Removals are noted in strikethrough (~~strikethrough~~); additions are noted by underline (<u>underline</u>).

Amend 122-532(b)(5) to replace “dispensary” with “provisioning center.”

Amend 122-421, 426, 441, 451, and 461 “group child care home,” notes column, from 6-12 children to “up to 12 children” to accurately reflect the amount of children permitted.

STAFF RECOMMENDATION

Staff recommends the Planning Commission recommend ***approval*** of the text amendments to City Council with the following findings:

1. The amendments are consistent with the guiding values of the Master Plan.
2. The amendments are consistent with the description and purpose of the district.
3. The amendments are consistent with the intent of the zoning ordinance.
4. The amendments will enhance the functionality and character of the future development in the City.
5. The amendments will help preserve the historic nature of the City.
6. The amendments will enhance the environmental sustainability of the City and not negatively affect its natural features.
7. The amendments will protect the health, safety, and general welfare of the public.
8. The amendments correct an oversight in the original text.
9. The proposed amendment will not result in the creation of significant nonconformities.

Bonnie Wessler
City Planner, Community & Economic Development Division

c.c. File

City of Ypsilanti
Community & Economic Development Department

23 April 2018

Staff Review of Site Plan Application
Cultivate Coffee & Taphouse
307 N River

GENERAL INFORMATION

Applicant:	Ryan Wallace Cultivate Coffee and Tap House 307 N River St Ypsilanti, MI 48198
Project:	Cultivate Coffee & Tap House
Application Date:	16 March 2018
Location:	Depot Town, on the south-west corner of North River and Photo.
Zoning:	C, Center
Action Requested:	Approval
Staff Recommendation:	Conditional Approval.

PROJECT AND SITE DESCRIPTION

Cultivate Coffee & Tap House ("Cultivate") is located in the former Ted's Auto Electric, and has been in operation since early 2015. In 2016, they expanded their parking area to the west of the existing parking, and created an outdoor service area to the west of the existing building. This site plan submittal is in furtherance of coming into conformance with the ordinance.

307 N River is zoned **Center,** which allows for bars and restaurants, as well as outdoor cafés, as permitted and accessory uses, respectively. Outdoor cafés are subject to specific standards found in 122-540. There are no parking minimums in the Center district.

Subject Site Location

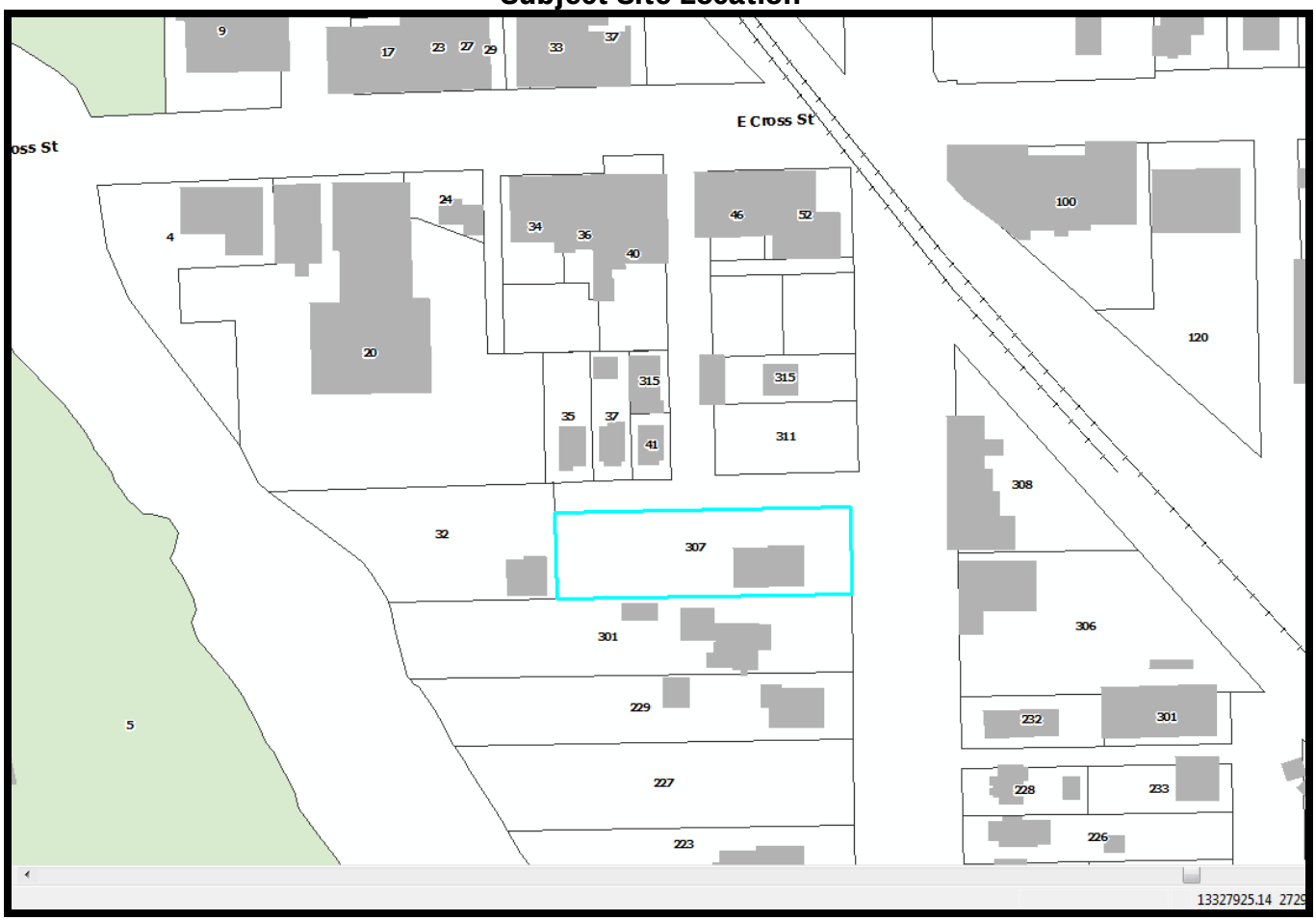

Site Aerial (2015)

Site Aerial (per Google, 2017)

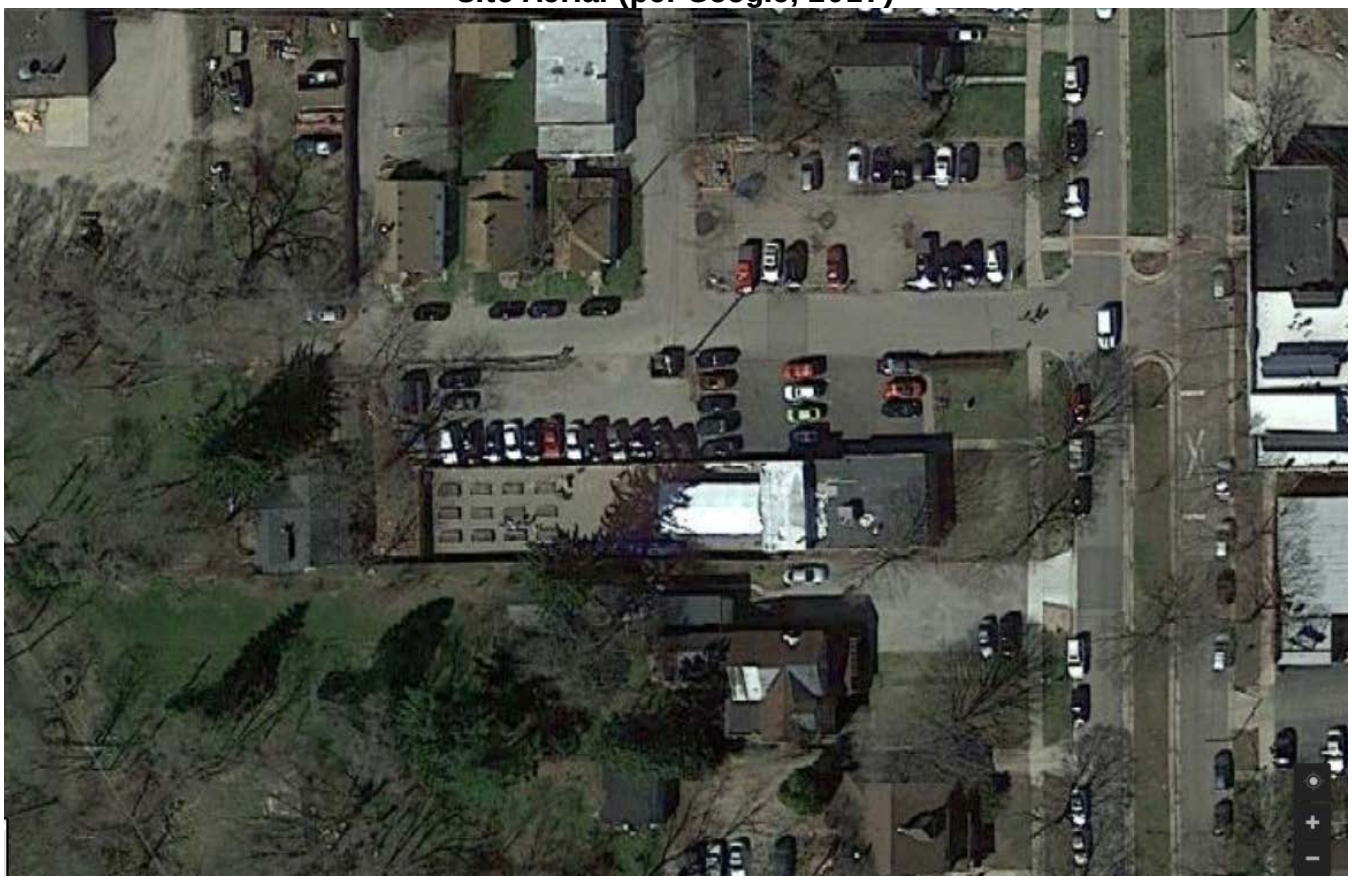

2011 Google Street View of site

2016 Google Street View of site

Land Use and Zoning of Surrounding Area

	LAND USE	ZONING
NORTH	Single family, parking	Center
EAST	Grocery store, shopping, services	Center
SOUTH	Multifamily residential	Historic Corridor
WEST	Single-family residential	Historic Corridor

SITE PLAN: CRITERIA AND REVIEW §122-311

STANDING §122-311(a)

The applicant is legally eligible to apply for site plan review, and all required information has been provided.

REQUIREMENTS §122-311(b)

"The proposed site plan conforms with all the provisions and requirements, as well as the spirit and intent of this chapter and the Master Plan. The proposed development will meet all the regulations of the zoning district in which it is located."

ORDINANCE REFERENCE		REQUIRED	EXISTING CONDITIONS	PROPOSED
C: §122-477	**BUILDING TYPE**	Determined by lot size	21,700 sf Single story commercial	Unchanged Existing nonconforming building type
	LOT: Unchanged.			
	BUILDING ENVELOPE AND HEIGHT: Unchanged.			
	ACCESSORY BUILDING ENVELOPE, FOOTPRINT, AND HEIGHT: Unchanged.			
	PARKING PROVISIONS	Permitted in the side, street side, and rear yards	Street Side	**Expanded street side.**
§122-540	**USE-SPECIFIC Outdoor cafes, restaurants, seating areas and beer gardens**	(a) All outdoor seating areas at grade level must be accessory to business which provides indoor seating or food concession. All storage, preparation and cooking of food and all vending machines shall be within an enclosed building or food concession. (b) The outdoor seating area shall be separated from all parking areas by means of a minimum three-foot high planting, wall, or other architectural feature delineating the space. (c) The outdoor seating area shall not be located within 50 feet of any properties zoned R1, MD, CN, CN-Mid, or CN-SF. (d) All outdoor areas shall be kept clean and void of litter at all times.	No outdoor seating	(a) Met (b) 6' privacy fence proposed (c) Met **(d) Applicant to note this requirement on the site plan.**

Items to be Addressed: Applicant to note the requirement "all outdoor areas shall be kept clean and void of litter at all times" on site plan.

BUILDING LOCATION AND SITE ARRANGEMENT §122-311(c)

"All elements of the site plan shall be harmoniously and efficiently organized in relation to the character of the proposed use, the size and type of lot, the size and type of buildings, and the character of the adjoining property. The site shall be so developed as not to impede the normal and orderly development or improvement of surrounding property for uses permitted in this chapter."

Building arrangement proposed to continue unchanged. Applicant proposes to extend westward an outdoor seating area/beer garden. As shown, beer garden has minimal accessible area for patrons with mobility disabilities; this is likely to be a challenge when obtaining Building Department approvals. Applicant also proposes extending the parking area westward, in gravel. Both the parking area and the outdoor seating area are set back 23' from the rear property line. The outdoor seating area is set back approximately 4' (varies slightly) from the south/side property line.

The dumpster is located in the street side yard. This is addressed later in this report.

Due to limited space on the north side of the building for parking, should the applicant wish to have parking, applicant may wish to consider relocating the outdoor seating area to the north of the building and the parking to the west.

Items to be Addressed: *None.*

SITE ACCESS, TRAFFIC, AND PARKING §122-311(d)

"With respect to vehicular and pedestrian circulation on the site, including walkways, interior drives, and parking; circulation shall to the extent possible create potential cross-and joint-access to adjacent parcels and the existing block layout. Special attention shall be given to the location, number and spacing of ingress and egress points; general interior circulation including turnaround areas; adequate provisions for delivery of services (trash removal, school buses, mail and parcel delivery); separation of pedestrian and vehicular traffic; avoidance of building corners next to access drives; identification of addresses; storage of plowed snow; and arrangement of parking areas that are safe and convenient, and insofar as practicable, do not detract from the design of the proposed buildings and structures, neighboring properties, pedestrian and bicyclist safety, access to transit and flow of traffic on adjacent streets. All buildings or groups of buildings shall be so arranged as to permit adequate access by emergency vehicles as required by the city building code."

Access to the site via car is currently done to the small paved parking to the north of the building, adjacent to the roll-up doors. There is bike parking available at the east end of the parking area. Foot traffic can approach from River or from Photo, as the area is highly walkable. However, there is no sidewalk on Photo nor on Ninde. Pedestrians from this direction must walk in the street. Photo generally has light traffic, with the vast majority going to/from the Sidetrack parking area to the north-east or to Cultivate. Note that both Ninde and Photo, while platted as streets, are quite narrow and more closely analogous to alleyways. Photo is less than 30' wide.

	ORDINANCE REFERENCE	REQUIRED	EXISTING CONDITIONS	PROPOSED
§122-685	**PARKING Dimensions**	• 9'x18' minimum, exceptions if adjacent to wall or overhang provided • May have 20% small car (8'x16', signed) • May have 10% motorcycle (5x8', signed)	One signed barrier-free space, approximately seven parking spaces.	**Undimensioned. Two barrier-free spaces are proposed near the building entrance; seven in the paved area. No count or dimensions given for parking in the graveled area.**
§122-683	**Access**	5' walkway from parking lot to parks, commercial, transit, walkways, institutions; raised/marked crosswalks within parking lot		Walkway marked towards south of parking area.
	Ingress & Egress	• Aligned across ROW, or offset by 25' • >50' from intersection • 20'-30' driveway		**Parking aisles have a unique configuration; they are end-on to Photo Street. This places them within 50' from the Ninde Intersection.**
	Internal Maneuvering	Each driveway providing access to an off-street parking lot containing five or more parking spaces shall be a minimum of ten feet in width. Where a turning radius is necessary, it shall be an arc that allows unobstructed vehicle flow.		Met

Surfacing	All parking and loading facilities and access drives shall be paved with a durable bonded material in accordance with accepted engineering standards, or alternative surfacing materials to minimize impervious surface and stormwater runoff, employ environmental and other best practices, and achieve low impact design, at the discretion of the City Engineer. Use of pervious alternative surfaces is encouraged in proximity to the Huron River and Paint Creek. Paving materials proposed to improve aesthetics may also be considered by the City Planner and the Planning Commission. Alternative surfaces proposed shall be reviewed by the City's consulting engineer.		See engineer's letter. Gravel surface is generally acceptable.
Drainage	All off-street parking and loading areas shall be graded and drained to public storm sewers. As an alternative, if in the opinion of the City's consulting engineer, the soils are of a type which will allow for efficient drainage, the use of drywells, infiltration trenches, swales, bio-retention or other best management practices for controlling urban runoff quality are permitted. No surface water shall be permitted to drain onto adjoining properties, unless there is a common engineered drainage system shared with the adjoining property or an appropriate watershed easement has been obtained. No surface water drainage from an off-street parking lot shall be permitted to drain across a public sidewalk.		See engineering review.

Setback from Street	Parking lot setbacks are designated by the zoning district in which they are located. An allowed exception are circular drives, which may be located in a required minimum front yard or street side yard, provided that such drives shall be designed so that no parking space is located closer than 25 feet to any street right-of-way line.		n/a.
Setback from Adjacent Lot	Parking areas are required to be 10' from any adjacent lot. Planning Commission may waive this requirement in whole or in part with a finding that the lot shares a common access and common parking with the adjoining lot, or that stormwater, landscaping, and other similar concerns have been adequately addressed with other methods.		Met.
Striping	For parking lots containing five or more spaces, all spaces shall be outlined with three-inch wide strips of white or yellow paint, except that barrier-free spaces shall be blue, with a symbol of compliance in blue, and signed in accordance with the State Barrier-Free Code.		Striping not possible in graveled lot. Striping in paved lot proposed to be in conformance.

Wheel Stops	For parking lots containing five or more spaces or accessory to commercial uses, wheel stops or curbing shall be provided for all parking spaces to prevent any vehicle from projecting beyond the parking lot area, bumping any wall or fence, or encroaching upon any landscaping. In all cases where parking lots abut public or private sidewalks, continuous concrete curbing or bumper stops, at least six inches high, shall be placed so that a motor vehicle cannot be driven or parked on, or hang over, any part of any sidewalk.		Wheelstops not provided in paved lot.
Lighting	With the exception of multiple-family dwellings on individual lots containing no more than four units, parking and loading facilities utilized during night-time hours shall be artificially illuminated. All such outdoor lighting shall meet the requirements of §122-609.		**No lighting proposed. Streetlights not shown on plan.**
Screening & Landscaping (internal)	1 tree per 8 spaces		**Two trees required.**
	1 landscape island for each 16 spaces		n/a
	Islands w trees: 9' wide min and 160' sf Islands w 5' min walkway: 11' wide min Islands: curbed or used for stormwater		n/a
	All aisle-ends & corners protected w curbed island		**Parking aisles unprotected in paved area.**
	3' between curb and planting (5' if vehicle overhang)		n/a
Screening & Landscaping (perimeter)	Screened in accordance with 703 if abutting R1, MD, CN, CN-Mid, CN-SF		n/a
	3'-4' screen 80% opacity where visible from ROW		**None provided from Photo.**

		Landscaped areas, walls, structures, walks- must be protected by curbing		Building walls and pedestrian walkway along building unprotected.
§122-691	**Motor spaces**			n/a
	Bicycle spaces	1 per 5 motor spaces, minimum of 2		n/a
§122-672	**SIDEWALKS**	provide a sidewalk or shared-use path This requirement may be modified by the Planning Commission as follows: (2) A fee in lieu of construction may be provided by the development in the amount of 100% of the construction cost, upon a finding that any portion of the perimeter of a lot is included in a transportation project programmed in the City's 5-year Capital Improvement Plan, or with a finding that sidewalk construction at this location is impractical due to lack of connectivity. Any fee paid for this purpose is reserved for non-motorized improvements as a part of the identified transportation project or for path and sidewalk construction throughout the City, respectively. (3) Any easement required for the construction, maintenance, or operation of a modified facility must be included on the site plan at the time the modification is requested.		**Construction of a sidewalk along Photo would primarily serve Cultivate's pedestrian traffic from their parking areas. There are, however, four single-family residences along Photo; one commercial building on Ninde, and two apartments on Ninde that may also benefit. Planning Commission may choose to consider a fee-in-lieu.**

§122-675 TRAFFIC VISIBILITY	Maintain shrubs/other obstructions lower than 30" and trees/other obstructions higher than 8': At driveway: within a 10'x10' triangle formed by the street ROW line and the edge of the driveway At intersection: within a 25' x 25' triangle formed by an extension of the property lines, as measured from the pavement edges.		**The dumpster placement is an extreme challenge to visibility for those exiting the gravel parking area.** **Applicant must apply for a variance or redesign the gravel parking area entrance.**

Items to be Addressed:

- No count or rough dimensions given for gravel parking area. Applicant to provide.
- Parking lot access is less than 50' from Ninde/Photo intersection. Applicant to revise.
- No lighting is shown on the plan. Applicant to show either site lighting or adequate street lighting.
- Two trees required.
- Parking aisles in paved area are unprotected by islands.
- Parking (both gravel and paved) is not screened from Photo.
- No sidewalk provided along Photo. Planning Commission waiver for fee-in-lieu requested.
- Dumpster is within the visibility triangle for the gravel parking. Applicant to revise entrance to gravel parking.
- Conflicting land use screening is required between the gravel parking and the residential use to the west.

ENGINEERING & STORMWATER §122-311(f), §122-311(g)

(6) Adequate services and utilities including sanitary sewers shall be available or provided, with sufficient capacity to properly serve the development. Appropriate measures will be taken to ensure that site drainage will not adversely affect adjoining properties or the capacity of the public storm drainage system, or nearby bodies of water. Provisions shall be made to accommodate stormwater and prevent soil erosion. All stormwater management facilities, including but not limited to storm sewers and detention/retention facilities, shall be designed in accordance with the "Rules of the Washtenaw County Water Resources Commissioner," together with any special provisions established by the city.
(7) Natural resources will be protected to the maximum feasible extent. The proposed development will not cause soil erosion or sedimentation problems, and will respect floodways or floodplains on or in the vicinity of the subject property.

See engineer's letter.

Items to be Addressed: None.

SCREENING §122-311(h)

"The site plan shall provide reasonable visual and sound privacy for all dwelling units on or adjacent to the property. Fences, walks, barriers, and landscaping shall be used, as appropriate, for protection and enhancement of the property. All outdoor storage of materials, loading and unloading areas, and refuse containers shall be screened or located so as not to be a nuisance. Outdoor lighting shall be shielded so as to not adversely affect neighboring properties or traffic on adjacent streets."

ORDINANCE REFERENCE	REQUIRED	EXISTING CONDITIONS	PROPOSED
§122-609 Lighting	• Dark Sky compliant; may be full cutoff where affecting residential uses • not >0.5 fc @ lot line • not >16'in height • not < 0.3 fc		**No lighting proposed. Show cut sheets and locations for all proposed site lighting.**
§122-608 Refuse Containers	Not located in the front yard or street side yard (waiver available) Maintained in a neat, orderly, and sanitary condition Adequate vehicle access must be provided masonry enclosure 1' taller than dumpster (no less than 6'), in rear yard, 80% opaque swing door	Dumpster in wooden enclosure	**Applicant shows a dumpster in the street side yard. Waiver requested as no other location with vehicular access is available, due to unique condition of Photo/Ninde.**
§122-631 Landscape plan			**None provided.**
§122-634 Screening Between Land Uses *if conflicting use*	visual buffer of at least 80% opacity and 6' height		Required between Cultivate and properties to south and west. **Gravel parking lot conflicts with residential use to west, screening must be provided.**
§122-636 Street Trees	1 tree per 30' of lineal frontage, centered between sidewalk and back of curb: 80'/30' = 6 trees		**River: 3 trees required. One tree present, with extensive canopy. Waiver of one tree requested; applicant to plant one additional tree.** **Photo: no street trees provided. Applicant requests a waiver.**

ORDINANCE REFERENCE	REQUIRED	EXISTING CONDITIONS	PROPOSED
§122-638 Site Landscaping	10%	None	met
§122-640 Exterior Electrical	Screen when visible from any primary visual exposure area	n/a	n/a
§122-632 Landscape Elements	Quality, composition, berms, spacing, species		No landscaping plan provided.
	Credit for existing vegetation		

Items to be Addressed:

- If outdoor lighting proposed, applicant to indicate on site plan and submit cut sheets.
- Waiver requested per 122-608(a) to allow placement of dumpster in street side yard, due to maneuverability challenges.
- Applicant to provide conflicting land use screening between gravel lot and property to west.
- Waiver from street tree requirement for one tree (of two) requested on River; waiver from street tree requirement on Photo for nine trees (of nine) requested.

OTHER DEPARTMENT AND AGENCY APPROVALS §122-311(j)

"Site plans shall conform to all applicable requirements of state and federal statutes, including health and pollution laws, fire or explosion hazards, toxic and hazardous materials, and barrier-free requirements. Site plan approval may be conditioned on the applicant receiving necessary county, state, or federal permits before a local building permit or occupancy permit is granted."

HISTORIC DISTRICT

All applicable Historic District reviews and approvals must be obtained.

DEPARTMENT OF PUBLIC SERVICES

The applicant is responsible for obtaining permits from the Department of Public Services before beginning work on any portion of the City right-of-way, including sidewalks, curbs, and driveways on Photo and River, as well as street tree plantings.

DISCUSSION

This site has several challenges due to the existing layout of the paved area, the building, and the relationship of each to Photo Street. It may be possible to reconfigure the proposed gravel lot to be angled parking, with an "in" at the current dumpster location and an "out" towards the west; the dumpster could be relocated southward towards the building as part of this reconfiguration. This may allow for off-street parking screening as well as the placement of some street trees. The aisled parking of the paved area as proposed is not an existing nonconformity, as parking prior was perpendicular from the building, but is an improvement over that condition as the vehicles are no longer backing directly into Photo Street. In the short term, it is possible that the site could work with some tweaks to the graveled area as discussed above and with the additional screening to the west. This, however, does not take full advantage of the site nor the building. Were the beer garden located to the north of the building, the overhead doors could be an asset in summer; the area immediately behind the building could be garden; and the bulk of the rear of the site could be parking. Due to the depth of the lot, it is likely that more parking than is currently available (even with the gravel lot) could be placed in the rear; this parking could be laid out with a more limited access to Photo Street, improving safety as well. Either the slight reconfiguration of the graveled lot or a complete overhaul of the site would bring the site into more conformance with the ordinance, improving traffic flows and compatibility with the neighborhood.

STAFF RECOMMENDATIONS: SITE PLAN

Staff recommends the Planning Commission *conditionally approve* the Site Plan for the Cultivate Coffee & Tap House with the following findings, waivers, and conditions:

Findings

1. The application substantially complies with §122-310.

Waivers

- Waiver requested per 122-608(a) to allow placement of dumpster in street side yard, due to maneuverability challenges.
- Waiver from street tree requirement for one tree (of two) requested on River; waiver from street tree requirement on Photo for nine trees (of nine) requested.
- Fee in lieu of provision of sidewalk along Photo is requested by the applicant.

Conditions

- If outdoor lighting proposed, applicant to indicate on site plan and submit cut sheets.
- Applicant to note the requirement "all outdoor areas shall be kept clean and void of litter at all times" on site plan.
- Applicant to address the following issues regarding the graveled parking area:
  - Lack of screening from Photo Street.
  - Lack of lighting. If on-site lighting is to be provided, please show in plan. If public street lighting is sufficient, please document.
  - Dumpster enclosure is within the visibility triangle of the parking lot entrance.
  - Conflicting land use screening is required between the parking area and the property to the west.
  - Provide approximate count of spaces proposed in gravel parking area.
  - Parking lot access is less than 50' from Ninde/Photo intersection. Applicant to revise.

Bonnie Wessler
City Planner, Community & Economic Development Department

CC File
Applicant

April 9, 2018

City of Ypsilanti Planning and Development Department
534 North Huron Street
Ypsilanti, Michigan 48197

Attention: Ms. Bonnie Wessler

Regarding: Cultivate Coffee & Tap House
Site Plan Review No. 1
OHM Job No. 0094-18-1030

Dear Ms. Wessler:

The applicant is requesting site plan approval for a proposal from the Cultivate Coffee & Tap House to make improvements to their existing site on North River Street and Photo Street in order to meet city standards. We have reviewed the plans dated February 22, 2018 for compliance with local ordinances and general engineering standards. At this time, we recommend site plan approval contingent on the following comments being addressed:

SITE PLAN REVIEW COMMENTS:

1. The applicant shall add "No Parking" signage to the north side of the existing gravel parking lot near the proposed guardrail.
2. Due to limited space behind the proposed dumpster location, it is recommended that bumper blocks be continued along the western edge of the dumpster enclosure to alleviate potential parking issues behind the enclosure.
3. The applicant shall provide clarification on the 10-inch stub that appears to terminate in front of the proposed dumpster pad location.

PRELIMINARY DETAILED ENGINEERING REVIEW COMMENTS:

4. The applicant shall provide grades for the handicap-accessible route from the parking lot to the building to ensure ADA compliance.

The applicant is advised that review and approval of detailed engineering plans is required prior to the start of construction.

If you have any questions, please contact me at (734) 522-6711.

Sincerely,
OHM Advisors

Jessica Katers, P.E.

Jessica Howard

OHM Advisors
34000 PLYMOUTH ROAD
LIVONIA, MICHIGAN 48150
T 734.522.6711
F 734.522.6427
OHM-Advisors.com

CC: Stan Kirton, Department of Public Works
Scott Westover, YCUA
File

P:\0000_0100\SITE_YpsilantiCity\2018\0094181030_Cultivate Coffee & Tap House\Site Review\Site #1\Cultivate_SP01.docx

CULTIVATE COFFEE & TAP HOUSE
SITE IMPROVEMENTS

307 N. RIVER STREET
YPSILANTI, MI 48198

OWNER/DEVELOPER
307 PROPERTY LLC | RYAN WALLACE
307 N RIVER ST
YPSILANTI, MI 48198
T: 616.502.3525

ARCHITECT
BOWERS + ASSOCIATES, INC.
2400 S. HURON PARKWAY
ANN ARBOR, MI 48104
T: 734.975.2400
F: 734.975.2410

CIVIL ENGINEER
NOWAK + FRAUS
46777 WOODWARD AVENUE
PONTIAC, MI 48342
T: 248.332.7931
F: 248.332.8257

PROJECT DESCRIPTION
SITE IMPROVEMENTS TO EXISTING PROPERTY
TO BRING UP TO CITY STANDARDS

SHEET INDEX

ARCHITECTURAL

T1.00	TITLE SHEET
SP1.00	SITE PLAN
SP2.00	SITE DETAILS

CIVIL

C1	BOUNDARY / TOPOGRAPHIC SURVEY
C2	PAVING / GRADING PLAN

ABBREVIATIONS:

ABV.	ABOVE
AFF	ABOVE FINISH FLOOR
ADJ.	ADJUSTABLE
AL.	ALUMINUM
ALUM.	ALUMINUM
ANOD.	ANODIZED
ANSI	AMERICAN NATIONAL STANDARDS INSTITUTE
APPROX.	APPROXIMATE
ARCH.	ARCHITECT
BD.	BOARD
BDRM	BEDROOM
B.F.	BARRIER FREE
BFF	BELOW FINISH FLOOR
BIT	BITUMINOUS
BLDG	BUILDING
BLKG	BLOCKING
B.O.	BOTTOM OF
BOTT.	BOTTOM
BTWN.	BETWEEN
CAB.	CABINET
CJ	CONTROL JOINT
CL.	CLOSET
CLOS.	CLOSET
CLG	CEILING
CMU	CONCRETE MASONRY UNIT
COL.	COLUMN
CONC.	CONCRETE
CONSTR.	CONSTRUCTION
CONT.	CONTINUOUS
CPT.	CARPET
C.T.	CERAMIC TILE
D.F.	DRINKING FOUNTAIN
DIA.	DIAMETER
DN.	DOWN
DPFG	DAMPPROOFING
DR.	DOOR
DS	DOWNSPOUT
DWG	DRAWING
EA.	EACH
EJ	EXPANSION JOINT
ELECT.	ELECTRICAL
ELEV.	ELEVATION
EQ.	EQUAL
E.W.	EACH WAY
E.W.C.	ELECTRIC WATER COOLER
EXP	EXPOSED
EX	EXISTING
EXT	EXTERIOR
FD	FLOOR DRAIN
FDN	FOUNDATION
FIN.	FINISH
FIXT.	FIXTURE
FLASH.	FLASHING
FLR.	FLOOR
FRP	FIBERGLASS REINFORCED PANEL
FRPFG	FIREPROOFING
FT.	FOOT, FEET
FTG.	FOOTING
GA	GAUGE
GALV	GALVANIZED
GB	GYPSUM BOARD
GFI	GROUND FAULT INTERRUPTER
GL.	GLASS, GLAZING
GYP.	GYPSUM
HD	HARDWOOD
HGT	HEIGHT
HM	HOLLOW METAL
HORIZ.	HORIZONTAL
H.P.	HIGH POINT
IN.	INCHES
INC.	INCLUDE, INCLUDING
INSUL	INSULATION, INSULATED
INT.	INTERIOR
ISOL.	ISOLATION
J.C.	JANITOR'S CLOSET
KIT	KITCHEN
L	LENGTH
LAV.	LAVATORY
LBS.	POUNDS
LLH	LONG LEG HORIZONTAL
LLV	LONG LEG VERTICAL
MANUF.	MANUFACTURER
MAR.	MARBLE
MAS.	MASONRY
MATL.	MATERIAL
MAX.	MAXIMUM

ABBREVIATIONS CONT.:

MECH.	MECHANICAL
MEMB.	MEMBRANE
MET.	METAL
MEZZ.	MEZZANINE
MFR.	MANUFACTURER
MIN.	MINIMUM
MISC.	MISCELLANEOUS
M.O.	MASONRY OPENING
MR	MOISTURE RESISTANT
MTD	MOUNTED
MTL	METAL
NATL	NATIONAL
N.I.C.	NOT IN CONTRACT
NO.	NUMBER
NTS	NOT TO SCALE
O.C.	ON CENTER
O.F.	OVERFLOW
OHDR	OVERHEAD DOOR
OPG	OPENING
OPP.	OPPOSITE
P.E.	PRE-ENGINEERED
PERIM	PERIMETER
PL	PLATE
P.LAM.	PLASTIC LAMINATE
PLYWD	PLYWOOD
P.P.T.	PRESERVATIVE PRESSURE TREATED
PR.	PAIR
PRE-ENG.	PRE-ENGINEERED
PREFAB	PREFABRICATED
PREFIN	PREFINISHED
PROJ.	PROJECT, PROJECTION
PROP.	PROPOSED/PROPERTY
PRTN	PARTITION
P	PAINT
PT	PORCELAIN TILE
QT	QUARRY TILE
R&S	ROD AND SHELF
R.C.	ROOF CONDUCTOR
R.D.	ROOF DRAIN
REFRIG.	REFRIGERATION, REFRIGERATOR
REINF.	REINFORCED
REINF'G	REINFORCING
REQ'D	REQUIRED
RET.	RETARDER
RF	RESILIENT FLOORING
RM.	ROOM
R.T.	RESILIENT TILE
RTNG	RETAINING
S.A.C.	SUSPENDED ACOUSTICAL CEILING
S.A.F.	SPRAY APPLIED FIREPROOFING
S.C.	SEALED CONCRETE
SCHED.	SCHEDULE
SCWD	SOLID CORE WOOD
SH	SHELF
SHW	SHOWER
SHT.	SHEET
SIM	SIMILAR
SPEC.	SPECIFICATION
SQ.	SQUARE
SS	STAINLESS STEEL
STD.	STANDARD
STL.	STEEL
ST. STL.	STAINLESS STEEL
STRUCT.	STRUCTURE
SUPP.	SUPPORT, SUPPORTED
SUSP.	SUSPENDED
SV.	SHEET VINYL
T&G	TONGUE AND GROOVE
TH.	THRESHOLD
TEL	TELEPHONE
THK	THICKNESS, THICK
T.O.	TOP OF
T.O.S.	TOP OF STEEL
TRANSF.	TRANSFORMER
TYP.	TYPICAL
UNO	UNLESS NOTED OTHERWISE
UR	URINAL
V.	VERTICAL
VB	VINYL BASE
VCT	VINYL COMPOSITE TILE
VERT.	VERTICAL
VWC	VINYL WALL COVERING
W.C.	WATER CLOSET
WD	WOOD
W.W.F.	WELDED WIRE FABRIC
W.W.M.	WELDED WIRE MESH

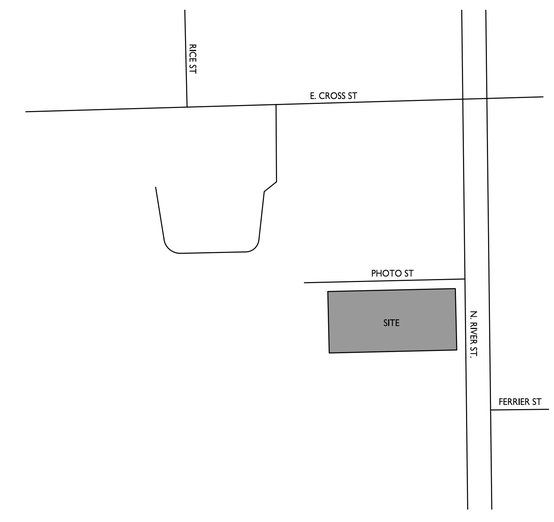

LOCATION MAP
NO SCALE

BOWERS+ASSOCIATES
ARCHITECTURE DESIGN
2400 SOUTH HURON PARKWAY + ANN ARBOR, MI 48104
P: 734.975.2400 + F: 734.975.2410
WWW.BOWERSNOW.COM

CONSULTANT + NAME

PROJECT + INFORMATION
CULTIVATE
COFFEE & TAP HOUSE
307 N RIVER ST
YPSILANTI, MI 48198

PROJECT + NUMBER
17-306

ISSUE + DATE

03 NOV 2017	
26 JAN 2018	OWN REV
12 MAR 2018	SITE

SHEET + TITLE
TITLE
SHEET
17306SP100.dwg

SHEET + NUMBER
T1.00

© Copyright 2017 Bowers + Associates, Inc.

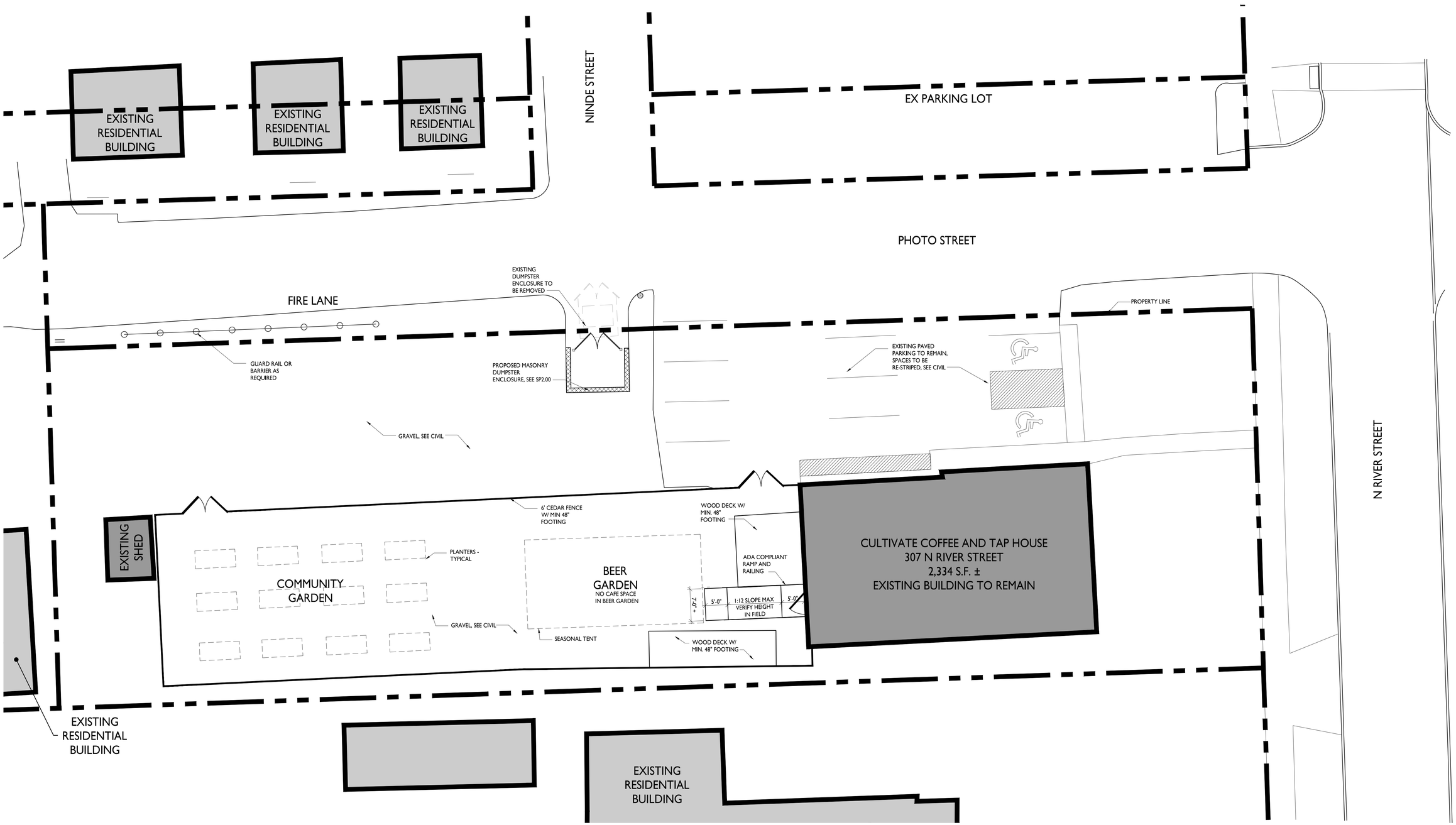

PRELIMINARY SITE PLAN
SCALE: 1" = 10'

BOWERS+ASSOCIATES
ARCHITECTURE DESIGN
2400 SOUTH HURON PARKWAY + ANN ARBOR, MI 48104
P: 734.975.2400 + F: 734.975.2410
WWW.BOWERSINCH.COM

CONSULTANT + NAME

PROJECT + INFORMATION
CULTIVATE
COFFEE & TAP HOUSE
307 N RIVER ST
YPSILANTI, MI 48198

PROJECT + NUMBER
17-306

ISSUE + DATE

23 AUG 2017	
03 NOV 2017	
26 JAN 2018	OWN REV
2 MAR 2018	OWN REV
12 MAR 2018	SITE

SHEET + TITLE
SITE PLAN
17306SP100.dwg

SHEET + NUMBER
SP1.00

© copyright 2017 Bowers + Associates, Inc.

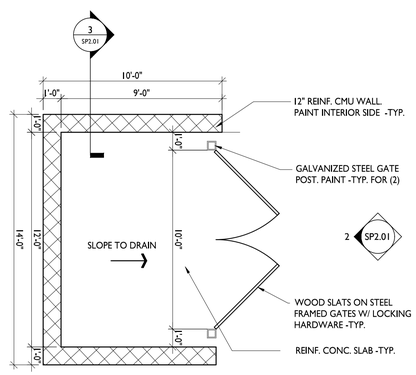

1 DUMPSTER PLAN
SP2.00 | SP1.00 SCALE: ¼" = 1'-0"

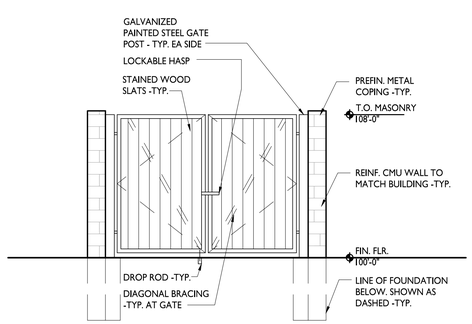

2 DUMPSTER ELEVATION
SP2.00 | SP1.00 SCALE: ¼" = 1'-0"

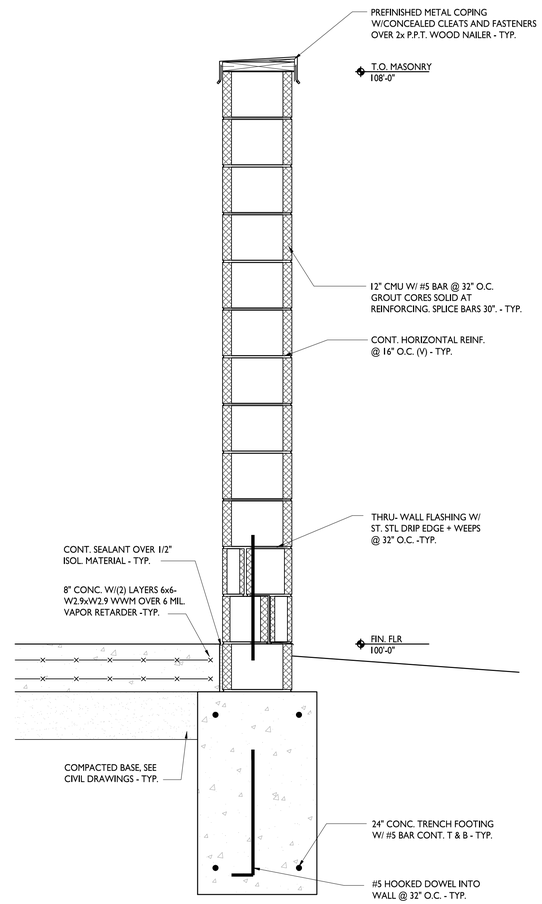

3 DUMPSTER SECTION
SP2.00 | SP1.00 SCALE: ¼" = 1'-0"

BOWERS+ASSOCIATES
ARCHITECTURE DESIGN
2400 SOUTH HURON PARKWAY + ANN ARBOR, MI 48104
P: 734.975.2400 + F: 734.975.2410
WWW.BOWERSINCH.COM

CONSULTANT + NAME

PROJECT + INFORMATION
CULTIVATE
COFFEE & TAP HOUSE
307 N RIVER ST
YPSILANTI, MI 48198

PROJECT + NUMBER
17-306

ISSUE + DATE

03 NOV 2017	
26 JAN 2018	OWN REV
2 MAR 2018	OWN REV
12 MAR 2018	SITE

SHEET + TITLE
SITE DETAILS
17306SP100.dwg

SHEET + NUMBER
SP2.00

© copyright 2017 Bowers + Associates, Inc.

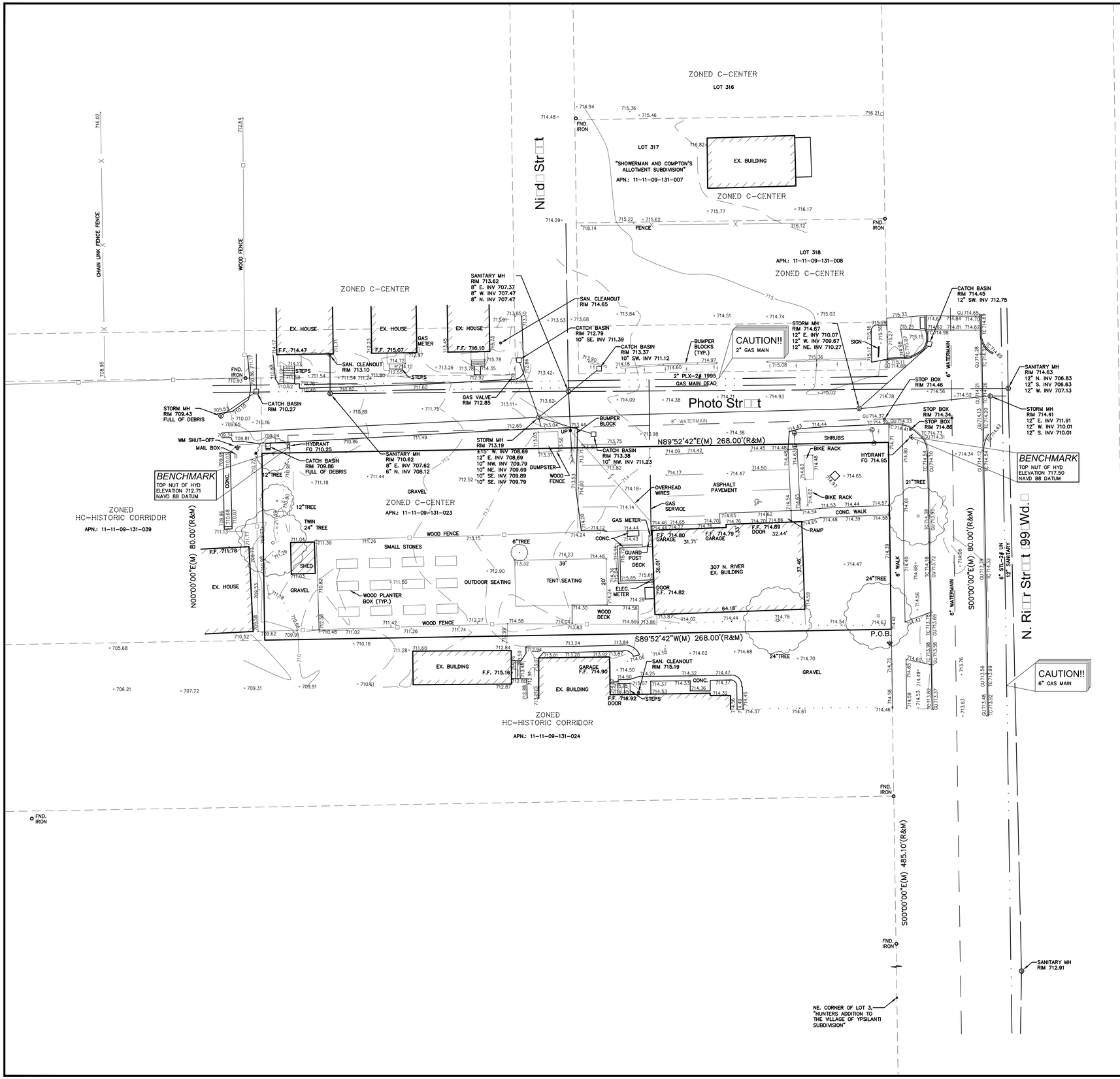

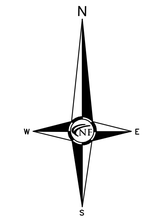

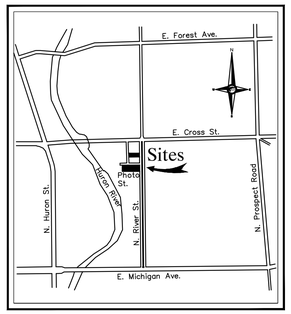

Location Map
N.T.S.

NF ENGINEERS
CIVIL ENGINEERS
LAND SURVEYORS
LAND PLANNERS

NOWAK & FRAUS ENGINEERS
46777 WOODWARD AVE.
PONTIAC, MI 48342-5032
TEL. (248) 332-7931
FAX. (248) 332-8257

SEAL

STATE OF MICHIGAN
KEVIN NAVAROLI
PROFESSIONAL SURVEYOR
No. 53503
LICENSED PROFESSIONAL SURVEYOR

PROJECT
Cultivate Coffee And
Tap House
307 N. River Street

CLIENT
307 Property, LLC
307 N. River Street
Ypsilanti, MI 48198
Contact: Ryan Wallace
Phone: (616) 502-3525

PROJECT LOCATION
Part of Frac. of Section 9
T.3S., R.7E.
Ypsilanti
Washtenaw County, Michigan

SHEET
Boundary / Topographic
Survey

811
Know what's below
Call before you dig.

REVISIONS
00-00-00

LE AL DESCRIPTION

PART OF FRAC. SECTION 9, T. 3 S., R. 7 E., YPSILANTI, WASHTENAW COUNTY, MICHIGAN, BEING DESCRIBED AS:COMMENCING AT THE INTERSECTION OF THE WEST LINE OF RIVER STREET (99.00 FEET WIDE) AND THE NE. CORNER OF LOT 3, "HUNTERS ADDITION TO THE VILLAGE OF YPSILANTI SUBDIVISION"; THENCE N. 00° 00' 00" E. 485.10 FEET; THENCE S. 89° 52' 42"W, 268.00 FEET; THENCE N. 00° 00' 00"E, 80.00 FEET; THENCE N. 89° 52' 42"E, 268.00 FEET; THENCE S. 00° 00' 00"E, 80.00 FEET TO THE POINT OF BEGINNING. CONTAINING 21,440 SQUARE FEET OR 0.492 ACRES.

PARCEL NO. 11-11-09-131-023
ADDRESS: 307 N. RIVER ST., YPSILANTI, MI 48198

MISS DI UTILITY DISCLAIMER NOTE

A MISS DIG TICKET NUMBER B73381457, PURSUANT TO MICHIGAN PUBLIC ACT 174 WAS ENTERED FOR THE SURVEYED PROPERTY. DUE TO THE EXTENDED REPORTING PERIOD FOR UNDERGROUND FACILITY OWNERS TO PROVIDE THEIR RECORDS, THE SURVEY MAY NOT REFLECT ALL THE UTILITIES AT THE TIME THE SURVEY WAS ISSUED ON 12-11-2017. THE SURVEY ONLY REFLECTS THOSE UTILITIES WHICH COULD BE OBSERVED BY THE SURVEYOR IN THE FIELD OR AS DEPICTED BY THE UTILITY COMPANY RECORDS FURNISH PRIOR TO THE DATE THIS SURVEY WAS ISSUED. THE CLIENT AND/OR THEIR AUTHORIZED AGENT SHALL VERIFY WITH THE FACILITY OWNERS AND/OR THEIR AUTHORIZED AGENTS, THE COMPLETENESS AND EXACTNESS OF THE UTILITIES LOCATION.

TOPO RAPHIC SURVEY NOTES

ALL ELEVATIONS ARE EXISTING ELEVATIONS, UNLESS OTHERWISE NOTED.

UTILITY LOCATIONS WERE OBTAINED FROM MUNICIPAL OFFICIALS AND RECORDS OF UTILITY COMPANIES, AND NO GUARANTEE CAN BE MADE TO THE COMPLETENESS, OR EXACTNESS OF LOCATION.

THIS SURVEY MAY NOT SHOW ALL EASEMENTS OF RECORD UNLESS AN UPDATED TITLE POLICY IS FURNISHED TO THE SURVEYOR BY THE OWNER.

LE END

- MANHOLE — EXISTING SANITARY SEWER
- HYDRANT — EXISTING SAN. CLEAN OUT
- GATE VALVE — EXISTING WATER MAIN
- MANHOLE, CATCH BASIN — EXISTING STORM SEWER
- EX. R.Y. CATCH BASIN
- EXISTING BURIED CABLES
- UTILITY POLE, GUY POLE, GUY WIRE — OVERHEAD LINES
- LIGHT POLE
- SIGN
- EXISTING GAS MAIN

DRAWN BY:
N. Naoum

DESIGNED BY:

APPROVED BY:
K. Navaroli

DATE:
02-22-2018

SCALE: 1" = 20'
20 10 0 10 20 30

NFE JOB NO. **K166**

SHEET NO. **1**

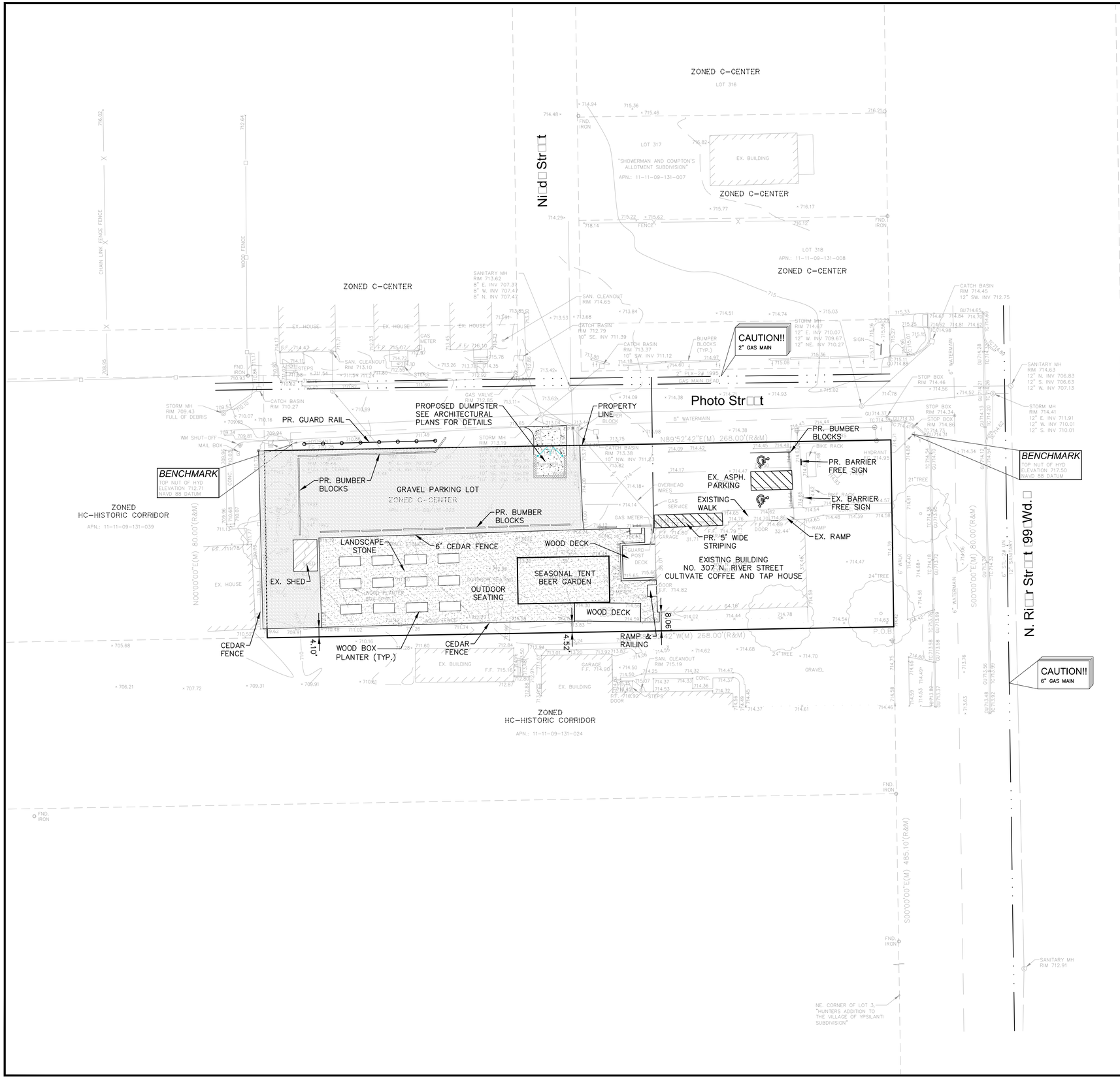

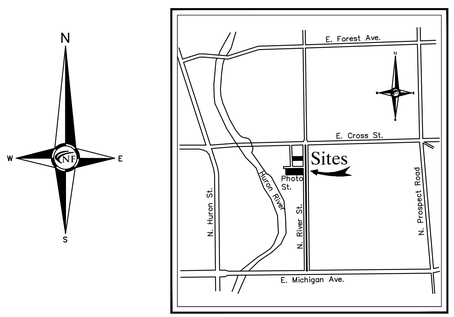

Location Map
N.T.S.

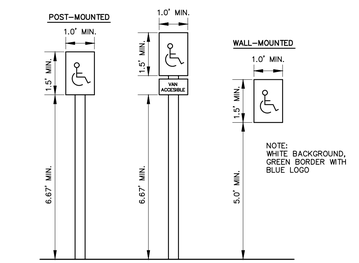

BARRIER FREE PARKIN SI NA E DETAIL
N.T.S.

PAVIN LE END

	PROPOSED CONCRETE PAVEMENT
	PROPOSED ASPHALT PAVEMENT

LE END

MANHOLE	EXISTING SANITARY SEWER
	SAN. CLEAN OUT
HYDRANT, GATE VALVE	EXISTING WATERMAIN
MANHOLE, CATCH BASIN	EXISTING STORM SEWER
	EX. R. Y. CATCH BASIN
UTILITY POLE, GUY POLE, GUY WIRE	EXISTING BURIED CABLES
	OVERHEAD LINES
	LIGHT POLE
	SIGN
	EXISTING GAS MAIN
C.O., MANHOLE	PR. SANITARY SEWER
HYDRANT, GATE VALVE	PR. WATER MAIN
INLET, C.B., MANHOLE	PR. STORM SEWER
	PR. R. Y. CATCH BASIN
	PROPOSED LIGHT POLE
TC 600.00	PR. TOP OF CURB ELEVATION
GU 600.00	PR. GUTTER ELEVATION
TW 600.00	PR. TOP OF WALK ELEVATION
TP 600.00	PR. TOP OF PVMT. ELEVATION
FG 600.00	FINISH GRADE ELEVATION

NF ENGINEERS
CIVIL ENGINEERS
LAND SURVEYORS
LAND PLANNERS

NOWAK & FRAUS ENGINEERS
46777 WOODWARD AVE.
PONTIAC, MI 48342-5032
TEL. (248) 332-7931
FAX. (248) 332-8257

SEAL

PROJECT
Cultivate Coffee And Tap House
307 N. River Street

CLIENT
307 Property, LLC
307 N. River Street
Ypsilanti, MI 48198
Contact: Ryan Wallace
Phone: (616) 502-3525

PROJECT LOCATION
Part of Frac. of Section 9
T.3S., R.7E.
Ypsilanti
Washtenaw County, Michigan

SHEET
Site Plan

811 Know what's below Call before you dig.

REVISIONS
00-00-00

DRAWN BY: N. Naoum
DESIGNED BY: N. Naoum
APPROVED BY: M. Peterson
DATE: 02-22-2018
SCALE: 1" = 20'

NFE JOB NO. K166
SHEET NO. 2

Bonnie Wessler

From: Mark Wright <MarkW@bowersarch.com>
Sent: Wednesday, July 11, 2018 4:43 PM
To: Bonnie Wessler
Cc: Ryan Wallace (ryan@cultivateypsi.org)
Subject: Cultivate
Attachments: 17306SP100-A.pdf; 17306SP100-B.pdf; 17306SP100-C.pdf

Bonnie,

I wanted to touch base with you in regards to the site plan revisions for Cultivate / 307 N River Street and our response to the city's review comments, in particular the ingress / egress issues with the Photo, Ninide intersection. I have attached 3 Preliminary site plans with different parking layouts.

Our preferred site plan would be Site Plan 'A' and is currently the one we plan to resubmit in which the gravel / dumpster access is aligned across from Ninide which would keep Cultivate traffic from having to travel down near the residential homes to enter the lot. It seems to align with the intent of Sec. 112-683 (b) (6) with Ninide's current use being closer to that of a public alley for the adjacent commercial properties.

Site Plan 'B' relocates proposed gravel drive 20' from the intersection per Sec. 112-683 (b) (7) This plan would be our proposed plan if the Planning Commission would allow our site to use the 20' offset for the proposed lot but not use layout 'A'

Site Plan 'C' is would create a new layout for the parking in the gravel and paved area to meet the 50' offset, however this would have all cultivate traffic driving down past the residential properties and seems to be the least desirable solution.

Can you advise me as to if we would require any separate applications whether for a variance or waiver in regards to aligning the drive or using the 20' offset so that we can include it with our resubmission or if you have any other comments that may be helpful to expedite finding a solution to this issue.

Thank You

MARK WRIGHT
ARCHITECTURAL ASSOCIATE
markw@bowersarch.com
T: 734.975.2400 x703

BOWERS+ ASSOCIATES
ARCHITECTURE DESIGN
2400 S. HURON PARKWAY + ANN ARBOR, MI 48104
T: 734.975.2400 + F: 734.975.2410

PARKING DATA

PARKING REQUIRED	0 SPACES
ACC. SPACES REQUIRED	1 SPACE W/ 5' ACCESS WAY
EXISTING PARKING TO REMAIN	8 SPACES 1 ACC. SPACE 9 TOTAL EXISTING
PROPOSED GRAVEL PARKING	9 SPACES
TOTAL SPACES TO BE PROVIDED	18 SPACES

LANDSCAPE DATA

6' EVERGREEN LANDSCAPE SCREENING TO BE PROVIDED ON WEST SIDE OF GRAVEL LOT

3' EVERGREEN LANDSCAPE SCREENING TO BE PROVIDED FROM PHOTO STREET TO GRAVEL LOT

3 STREET TREES REQUIRED
1 EXISTING STREET TREE TO REMAIN
1 PROPOSED STREET TREE
1 WAIVER REQUESTED FOR REMAINING REQUIRED TREE

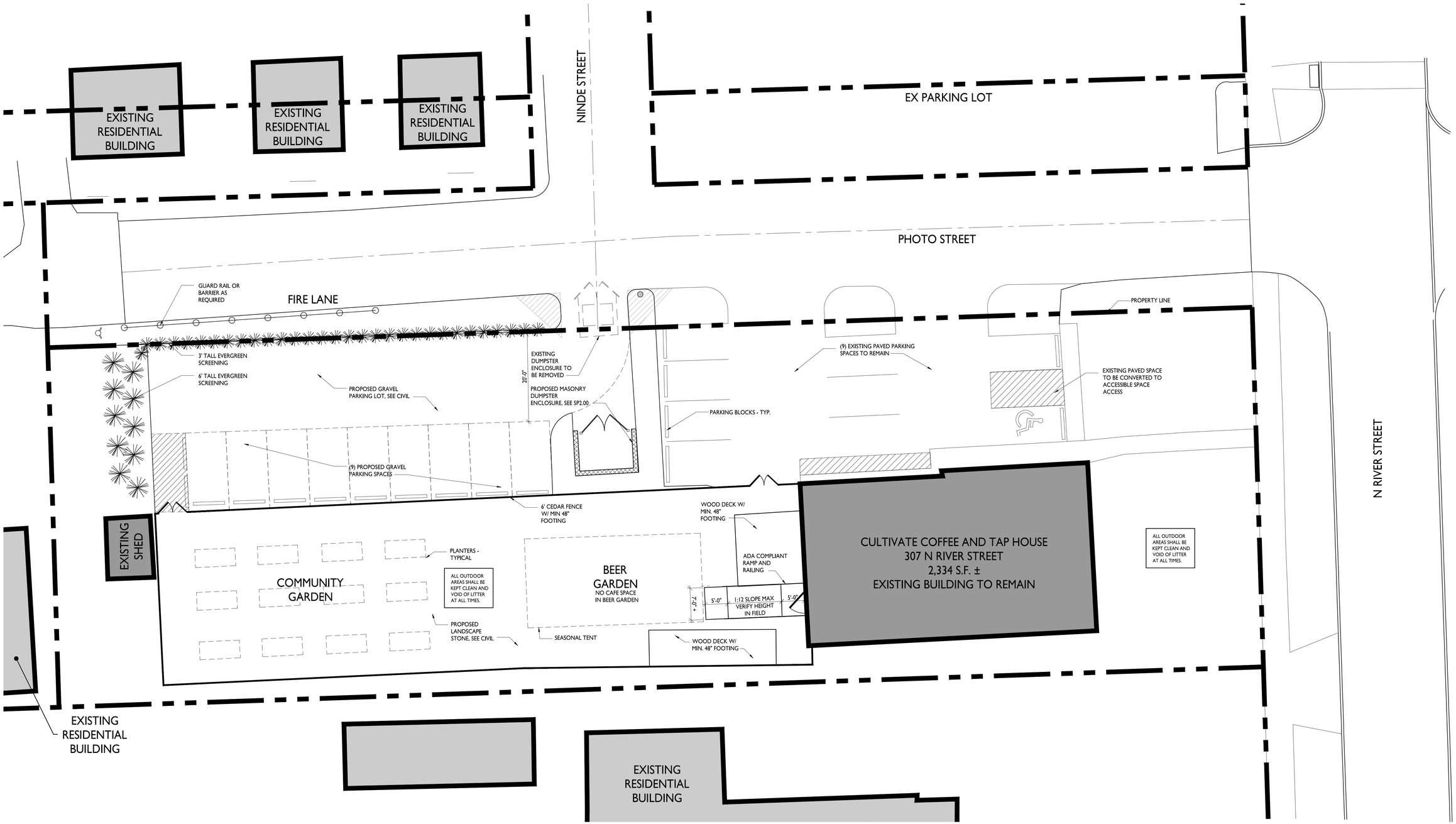

PRELIMINARY SITE PLAN
SCALE: 1" = 10'

BOWERS+ASSOCIATES
ARCHITECTURE DESIGN
2400 SOUTH HURON PARKWAY + ANN ARBOR, MI 48104
P: 734.975.2400 + F: 734.975.2410
WWW.BOWERSPLUS.COM

CONSULTANT + NAME

PROJECT + INFORMATION
CULTIVATE COFFEE & TAP HOUSE
307 N RIVER ST
YPSILANTI, MI 48198

PROJECT + NUMBER
17-306

ISSUE + DATE

23 AUG 2017	
03 NOV 2017	
26 JAN 2018	OWN REV
2 MAR 2018	OWN REV
12 MAR 2018	SITE
25 JUNE 2018	OWN. REV.

SHEET + TITLE
SITE PLAN
17306SP100.dwg

SHEET + NUMBER
SP1.00

© copyright 2017 Bowers + Associates, Inc.

PARKING DATA

PARKING REQUIRED	0 SPACES
ACC. SPACES REQUIRED	1 SPACE W/ 5' ACCESS WAY
EXISTING PARKING TO REMAIN	8 SPACES 1 ACC. SPACE 9 TOTAL EXISTING
PROPOSED GRAVEL PARKING	9 SPACES
TOTAL SPACES TO BE PROVIDED	18 SPACES

LANDSCAPE DATA

6' EVERGREEN LANDSCAPE SCREENING TO BE PROVIDED ON WEST SIDE OF GRAVEL LOT

3' EVERGREEN LANDSCAPE SCREENING TO BE PROVIDED FROM PHOTO STREET TO GRAVEL LOT

3 STREET TREES REQUIRED
1 EXISTING STREET TREE TO REMAIN
1 PROPOSED STREET TREE
1 WAIVER REQUESTED FOR REMAINING REQUIRED TREE

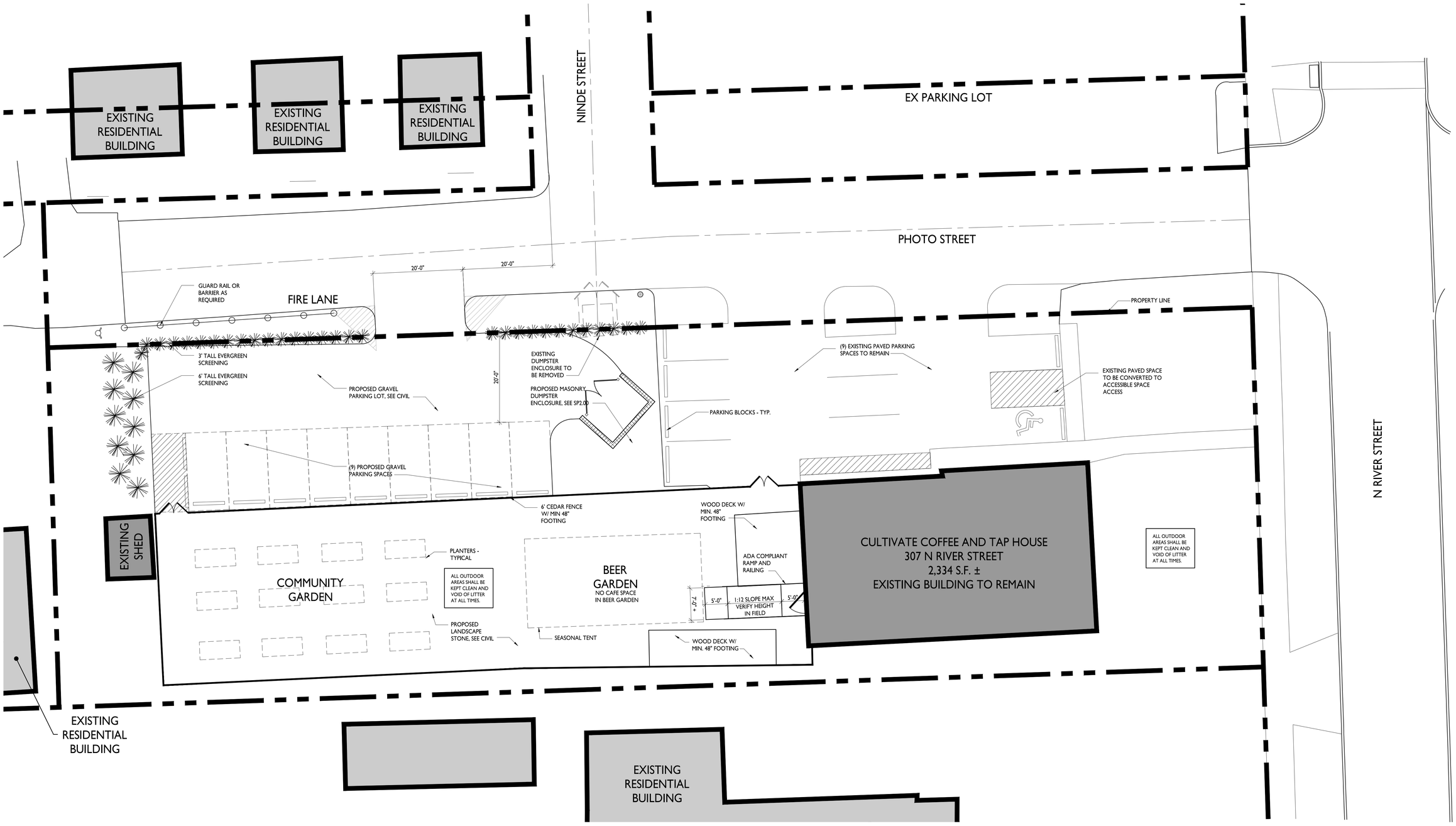

PRELIMINARY SITE PLAN
SCALE: 1" = 10'

BOWERS+ASSOCIATES
ARCHITECTURE DESIGN
2400 SOUTH HURON PARKWAY + ANN ARBOR, MI 48104
P: 734.975.2400 + F: 734.975.2410
WWW.BOWERSINCH.COM

CONSULTANT + NAME

PROJECT + INFORMATION
CULTIVATE
COFFEE & TAP HOUSE
307 N RIVER ST
YPSILANTI, MI 48198

PROJECT + NUMBER
17-306

ISSUE + DATE

23 AUG 2017	
03 NOV 2017	
26 JAN 2018	OWN REV
2 MAR 2018	OWN REV
12 MAR 2018	SITE
25 JUNE 2018	OWN. REV.

SHEET + TITLE
SITE PLAN
17306SP100c.dwg

SHEET + NUMBER
SP1.00

© copyright 2017 Bowers + Associates, inc.

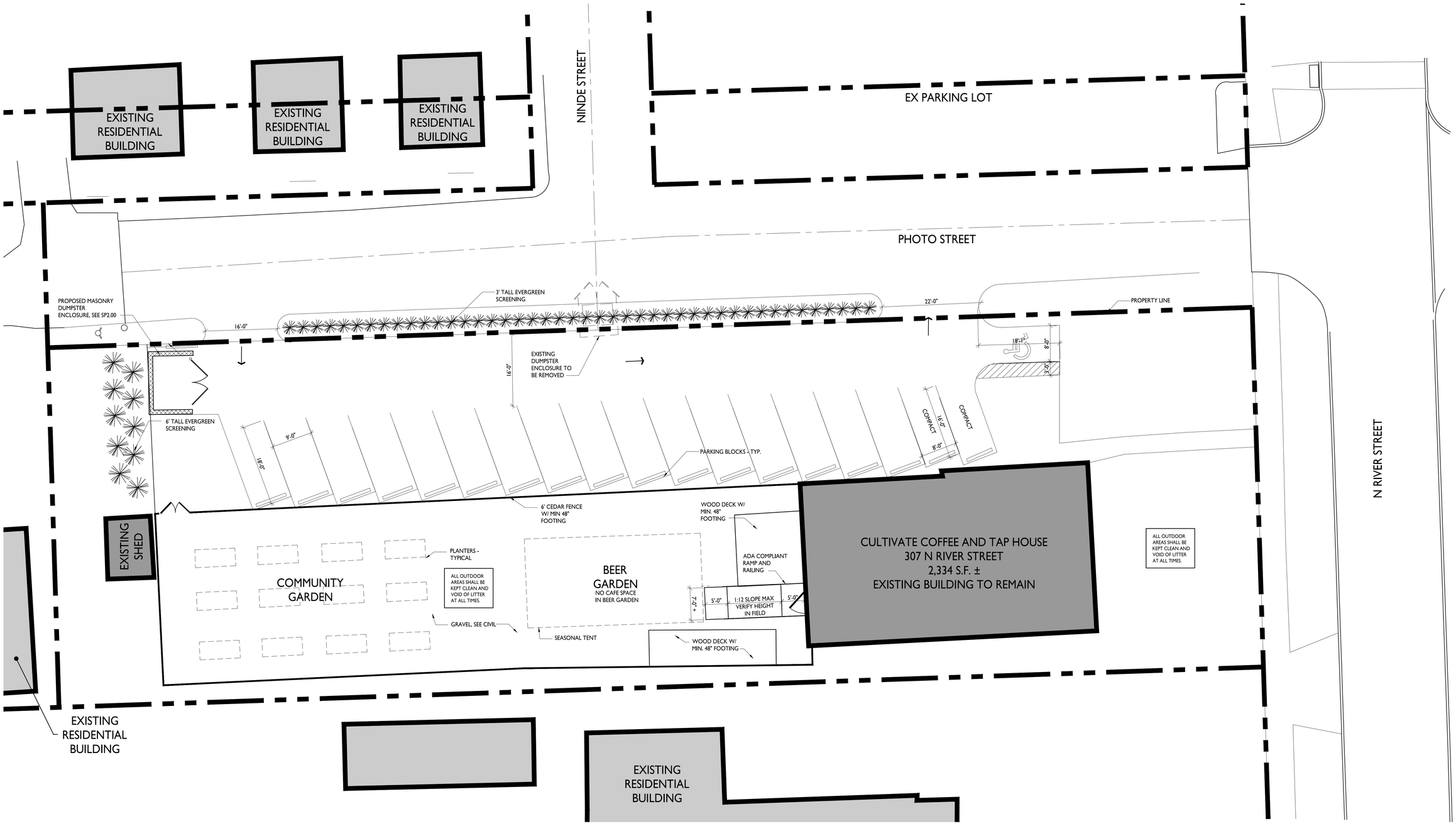

PRELIMINARY SITE PLAN
SCALE: 1" = 10'

BOWERS+ASSOCIATES
ARCHITECTURE DESIGN
2400 SOUTH HURON PARKWAY + ANN ARBOR, MI 48104
P: 734.975.2400 + F: 734.975.2410
WWW.BOWERSARCH.COM

CONSULTANT + NAME

PROJECT + INFORMATION
CULTIVATE COFFEE & TAP HOUSE
307 N RIVER ST
YPSILANTI, MI 48198

PROJECT + NUMBER
17-306

ISSUE + DATE

23 AUG 2017	
03 NOV 2017	
26 JAN 2018	OWN REV
2 MAR 2018	OWN REV
12 MAR 2018	SITE
25 JUNE 2018	OWN. REV.
8 JULY 2018	OWN. REV.

SHEET + TITLE
SITE PLAN
17306SP100b.dwg

SHEET + NUMBER
SP1.00

© copyright 2017 Bowers + Associates, Inc.

Resolution For Committee Member Appointment To The Non-Motorized Advisory Committee

Whereas, the bylaws of the Non-Motorized Advisory Committee, Section 1, article b, state…

> *"Committee members – The Committee Chairman shall select Committee members from City residents interested in serving on the Committee. Committee members will serve a two-year term of office, with Committee member appointments approved by the City of Ypsilanti Planning Commission. A Committee member's term starts on the date they are approved by the Planning Commission and expires on the last day of the month two years later", and*

Whereas, at its January 9, 2019 meeting the Non-Motorized Advisory Committee, the Committee Chair noted that Helen Schulte and Dylan Goings are both interested in serving on the Committee, and with no objection from Committee members, the Chair would recommend to the Planning Commission that they be appointed to the Committee.

Therefore Be It Resolved that the Non-Motorized Advisory Committee Chair recommends to the Planning Commission that Helen Schulte and Dylan Goings be appointed to the Committee for a two-year term of office.

Resolution For Committee Chair Recommendation For The Non-Motorized Advisory Committee Chair Position

Whereas, the bylaws of the Non-Motorized Advisory Committee, Section 1, article a, state…

> *"During January of every odd-numbered year, the Planning Commission shall appoint a Committee Chair, taking in account the recommendation of the Committee members, to serve a two-year term of office. In turn the newly appointed Committee Chair will select Committee Vice-Chair and Secretary to serve two-year terms of office",* and

Whereas, at its January 9, 2019 meeting the Non-Motorized Advisory Committee a motion was made, seconded and approved, to recommend that Bob Krzewinski be reappointed Chair of the Committee.

Therefore Be It Resolved that the members of the Non-Motorized Advisory Committee recommend to the Planning Commission that Bob Krzewinski be reappointed for a two-year term as Chair of the Committee

City of Ypsilanti

Community & Economic Development Department

Memo

To: Planning Commission

From: Bonnie Wessler, City Planner

Date: 11 January 2019

Subject: Combination Master Plan Update & Sustainability Plan Proposals

---

Planning Commission and the Sustainability Commission were sent three proposals for development of the Master Plan Update & Sustainability Plan. Staff invited questions from these bodies for staff to pass along to the agencies that submitted proposals. We will discuss those proposals at the 16 January meeting.

City Of Ypsilanti Non-Motorized Advisory Committee
2018 Annual Report

Introduction

The City of Ypsilanti Non-Motorized Advisory Committee was created out of a recommendation in the City Non-Motorized Plan and serves under the City Of Ypsilanti Planning Commission. The Committee was formed in September 2010.

The Statement of Purpose of the Committee is as follows… "The City of Ypsilanti Non-Motorized Advisory Committee, working through the Planning Commission, will work to enact recommendations of the City of Ypsilanti Non-Motorized Plan so as to offer residents increased non-motorized transportation and recreation options as well as having the Plan creating economic and quality of life incentives to the City".

Operations

The Committee met, with the exception of February, July and October, every month of 2018 at the Ypsilanti District Library, 229 West Michigan Avenue.

2018 members of the Committee through the year (some terms ended, others began) were as follows…

- Tony Bedogne (also a City Of Ypsilanti Planning Commission member – resigned in June due to moving out of the City of Ypsilanti)
- Martha Cleary (Resigned due to family obligations in June)
- Bob Krzewinski
- Jared Talaga (also a City Of Ypsilanti Planning Commission member)
- Sarah Walsh

Non-Motorized Advisory Committee 2018 Actions

During 2018 the Committee actively worked to complete many of the goals of the Non-Motorized Plan, as listed below.

- Public Input – The Committee's meetings always start with a public input session on the City's Non-Motorized Plan and the work of the Committee. The Committee also maintains a Facebook page offering an opportunity for additional public input.

- Publicity/Outreach – Committee meetings are publicized though an official City notice by the City Clerks office as well as announcements over the Committee's Facebook page as well as through other email/Facebook pages (i.e. Bike Ypsi, Bike-Bus-Walk Ypsilanti, etc.). The Committee had a table at the annual Parkridge Festival (8/25/18) where safe bicycling and walking information was distributed and 50 bicycle helmets were given away free courtesy of a grant from the Ann Arbor Bicycle Touring Society (www.aabts.org). The Committee also had a table at the downtown Halloween Festival (10/26) where lighted wristbands were distributed (courtesy of the AAATA) and safe trick-or-treating handouts were distributed. The Committee also continues to work with the County-wide advocacy group, the Washtenaw Bicycling and Walking Coalition (www.wbwc.org).

- City Meetings – Members of the Committee met, or had telephone conversations, with Planning Department staff prior to most Committee meetings for input and updates. Also, Committee members attended numerous City Council and Planning Commission meetings throughout 2018 to support non-motorized projects.

- Committee Priorities – Every October and November, the Committee reviews possible priorities for the coming calendar year and finalizing the list at its December meeting. The Committee priorities are then forwarded to the Planning Department and City Council.

- Snow Removal – In the winter months the Committee mounted a campaign to educate area residents, thorough social media and its Facebook page, about the need to shovel sidewalks as required by City ordinance and how to report problems using ClickFix – Ypsi Connect. The Committee timed media actions to that of just prior to major snowfalls with information sent to all City neighborhood groups on Facebook and NextDoor.

- City Non-Motorized Plan – The Committee is working with the Planning Department to update the City's Non-Motorized Plan and expects the process to be complete in 2019.

- Border To Border Trail – During 2018, the Washtenaw County Parks & Recreation Commission (WCP&RC), the main governmental body behind the Border To Border (B2B) Trail, continued work on an Eastern Washtenaw County (i.e. east of US 23) B2B Trail Master Plan. A working group was established with members that included staff from the City Economic Development Department, City Planning Department and City Non-Motorized Advisory Committee Bob Krzewinski, sitting on the working group as the Chair of the Friends of the Border To Border Trail.

- Bike Friendly Community & Walk Friendly Community status – The City officially became a League of American Cyclists "Bike Friendly Community "at the Bronze level in late 2017 with the award being for a four-year period. In January 2018 the Washtenaw Bicycling & Walking Coalition awarded a grant to purchase five BFC signs that were installed at City "gateway" locations by the City Public Services Department. On the Walk Friendly Community status, the City was received a "honorable mention" standing with the report card for the award noted that to obtain full Walk Friendly status, items such as an ADA Transition Plan, a Safe Routes To School program, Open Street (closing down a street for short periods for pedestrians) events, improved pedestrian crossing signals, pedestrian counts and law enforcement cooperation need to be addressed. The Committee plans to resubmit the Walk Friendly Community once the Non-Motorized Plan is updated.

- City Council Budget – Committee members attended the annual City Council budget meetings providing non-motorized project recommendations to Council.

- Bike Friendly Business program – The Committee, with the support of the Downtown Association of Ypsilanti, continued to sign up participants for a local Bike Friendly Business (BFB) program as a way to promote active and healthy lifestyles for employees and customers in the Ypsilanti area. The campaign will honor corporations, organizations, associations, government agencies or non-profit groups located in Ypsilanti that actively promotes bicycling for transportation, recreation, exercise and sport. Business participants receive a BFB window sticker and are listed on the Bike-Bus-Walk Ypsi (www.bbwypsi.org) web site.

- Bike Lanes –In 2018 the Committee also started researching areas where additional bike lanes would be used in the City, with the top two locations being West Cross Street (west of Wallace) and Harriet/Spring/Factory/Maus Streets. In March 2018 the Committee forwarded a resolution to the Planning Commission noting that "the lack of a center turn lane on Cross Street at the intersection of Mansfield Street is a real safety factor" and urging that "as part of a West Cross Street repaving project, a two-lane, plus center turn lane, configuration going as far west as practical that would include bicycle lanes on both sides of the road as well as vehicle parking on the south side of West Cross Street."

- ReImagine Washtenaw – At the April 2018 Committee meeting, Nathan Voght, ReImagine Washtenaw Project Manager, gave an overview and update on the ReImagine Washtenaw project along with the challenges that are faced. Committee members assisted the County Office of Community & Economic Development in performing pedestrian counts on Washtenaw Avenue in April to be used for potential mid-block pedestrian crossings.

- Three-Foot Passing Law – The Committee placed basic information on the Committee Facebook page about the Michigan 3-foot bicycle passing law taking effect the end of September and shared with a few area discussion groups. A more thorough educational effort on the 3-foot law is planned for the spring of 2019.

- Bike repair Station – The Committee worked with the Friends of the Border To Border (B2B) Trail to obtain and have installed a bike repair station (containing a work stand, tools and an air pump), as well as a donated bike parking loop, on the south plaza of the non-motorized bridge over the Huron River just east of downtown. It should be noted the bike repair station came from a grant that the Friends of the B2B Trail received from the REI Co-Op and the bike parking stand was a donation from the Friends.

- I-94/Huron – Hamilton Streets Non-Motorized Projects - The Committee continued to follow these items closely as there are a fair number of pedestrians and bicyclists using Huron Street over I-94 with no dedicated non-motorized facilities.

- Bike Bus-Walk Week (May 13-19) – With the intent to have individuals try alternative transit in the hope that such modes of transportation would become a habit, the Committee coordinated events during this week (also known as national Bike To Work Week). Events during this week included a Border To Border Trail bicycle ride (sponsored by the Friends of the Border To Border Trail – www.bordertoborder.org), and a "Ride Of Silence" (sponsored by the Ann Arbor Bicycle Touring Society and the Ypsilanti- headquartered Program To Educate All Cyclists) starting from Recreation Park to memorialize cyclists injured or killed and urging motorists and cyclists show respect for each other. The Friday of Bike-Bus-Walk Week is also known nationally at Bike To Work Day and a bike commuting station was set up that morning at Beezy's Café by the Committee offering free bike maps, literature, coffee snacks, etc.

Ypsilanti Non-Motorized Advisory Committee Meeting Minutes
Wednesday, January 9, 2019

1. Call to order - The meeting was called to order at 7:10pm at Biggby's Coffee, 1510 Washtenaw Avenue, Ypsilanti. Committee members attending was Sarah Walsh, Jared Talaga and Bob Krzewinski. Also attending was Mayor Beth Bashert, Helen Schulte and Dylan Goings.
2. Introductions - Audience participation - Public input – A discussion was held with Mayor Bashert with the following notations...
    - A meeting will be set up with the Mayor, Planning Commission Chair and Vice-Chair, and Non-Motorized Advisory Commission Chair, to discuss making sure that non-motorized projects have proper input by respective City entities as well as making more transparent non-motorized funds and disbursements.
    - The Mayor and Committee will work together on media work dealing with safe bicycling education in the spring and sidewalk snow removal in the late fall.
    - Revisiting curb cut priorities and taking in input from the area's disabled community, possibly through public input sessions.
    - Promoting greater communications though possibly starting regular "Walk & Talk With The Mayor" walks as well as "wheelchair tours" (possibly done in conjunction with the Ypsilanti-based Program To Educate All Cyclists – PEAC) to give able-bodied people a chance to experience problems that wheelchair users encounter.
3. General business
    a. Agenda approval – A motion was made by Sarah, seconded by Jared to approve the agenda, passing unanimously.
    b. Approval of December meeting minutes – A motion was made by Sarah, seconded by Bob, to approve the December meeting minutes passing unanimously.
    c. Committee Bylaws – Committee Chair recommendation to Planning Commission – With no other Committee members interested in the position, a motion was made by Sarah, seconded by Jared, to recommend to the Planning Commission that Bob be reappointed to another two-year term as Committee Chair, passing unanimously. Bob will forward the action to the Planning Commission for action.
    d. Additional Committee member recruitment – Bob will provide the Mayor with a news items for the Mayors Newsletter asking for volunteers to serve on the Committee.
    e. Other – Bylaws – Sarah will document possible revisions to the Committee bylaws by the next Committee meeting.
4. Old & continuing business
    a. 2019 Committee priorities
        1. City Non-Motorized Plan – Jared will be working on the latest draft Plan revision over the next few weeks.
        2. Sidewalk curb cut inventory & improvements – City Planner Bonnie Wessler noted that there is a curb cut inventory already completed and Jared will work on a program where area residents

can document where existing curb cuts are deficient or locations where new curb cuts are very much needed.

3. Pedestrian Improvements – For the upcoming City budget revisions, the Commission urges that the City again consider establishing traffic calming procedures (such as speed bumps) and purchase permanent (i.e. solar powered) radar speed signs at select locations (i.e. southbound Prospect Road at Holmes, westbound Cross Street approaching Depot Town).
4. Bike Lanes – In talking with City staff, it is the Committee's understanding that the West Cross Street repaving will include a road diet taking bike lanes further west beyond the Mansfield Street intersection. Harriet/Spring/Factory/Maus
5. Communication – Future Committee meeting invitations will include City Council members.
6. Non-Motorized City budget – Discussed earlier in the meeting with the Mayor. Also, Bob will forward a City budget timeline to Committee members.
7. Bike Boulevards – Discussion held on the concept of encouraging pedestrians and bicyclists to use quieter streets that can be improved for such use with low-cost resources. Also, a more fitting name may be "People Friendly Streets".
8. Border To Border Trail – Word is expected to begin in 2019 for improvements to Frog Island, Riverside Park and Grove Road.
9. Walk Friendly Community application – Expected to be sent in once the City Non-Motorized Plan update is completed.
10. Sidewalk/Curb Cut snow removal promotion – Once a significant snow event takes place, Bob will send out a notice to area residents using Facebook and NextDoor social media reminding residents of sidewalk snow removal laws.
11. Events – A Border To Border (B2B) Trail walk was held by the Friends of the B2B Trail on New Year's Day with nearly 30 people showing. Bob is still planning on having a cold weather cycling talk this winter. Bike helmet grants will be researched for the August Parkridge Festival where the Committee traditionally has a table.
12. Dockless bicycle/scooter policy by City – A City hearing notice was posted, then withdrawn, on a City scooter policy. The Committee sees a real need for the City to adopt some type of ordinance regarding electric bikes/scooters and Dylan Goings will research "best practices" ordinances other cities have enacted.

b. Committee Annual Report – A motion was made by Jared, seconded by Sarah, to approve the draft 2018 Annual Report, passing unanimously. Bob will forward the document to the Planning Commission.
c. Other – Jared has given "winter wheelchairing" talks and will forward data to Bob for Committee publication to area residents.

5. New Business
   a. Planning Department update
   b. Other
      - New Committee Members – Both Helen Schulte and Dylan Goings indicated they are willing to serve on the Committee. With no objections from Committee members, their names will be submitted to the Planning Commission for approval to serve.

- Joint Meetings discussion was held on possible joint meetings of the Non-Motorized Advisory Committee and the Parks & Recreation Commission, or Committee/Commission members sitting in on each other's meetings.

6. Other Items – Announcements – Next meeting – No announcements. For the next meeting Bob will be out of town for a number of weeks in January and February so no February meeting will be held.
7. Adjournment – A motion was made by Sarah, seconded by Jared, to adjourn the meeting. The motion was approved unanimously, and the meeting was adjourned at 8:46pm. The next meeting will be Thursday, March 7, 7pm at the downtown Library